Design of an Automated Salt Shaker for Fast Food Applications

A Major Qualifying Project completed in partial fulfillment of the Bachelor of Science degree at

WORCESTER POLYTECHNIC INSTITUTE

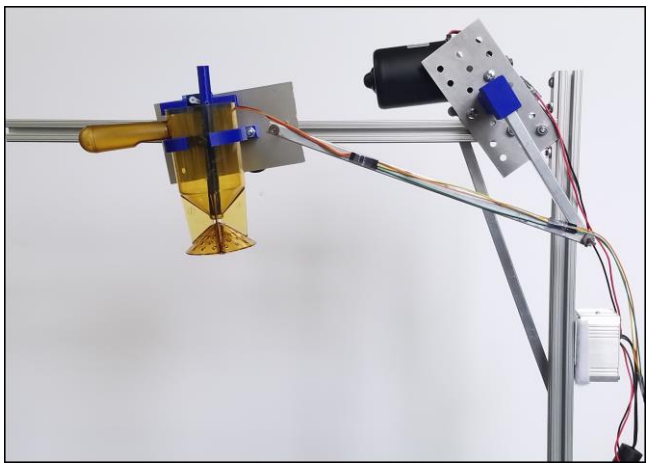

By

Harrison Czajkowski and Matthew Lenthall

2017/2018

Submitted to

Professor Eben Cobb, PhD
Mechanical Engineering Department

Table of Contents

Table of Contents ii

Acknowledgements iv

Abstract v

List of Figures vi

List of Tables vi

1.0 - Introduction 1

2.0 - Background Chapter 2

2.1 The Fast Food Industry 2

2.1.1 The Scope of Quick Service Restaurants 2

2.1.2 Fries: A Fundamental Fast Food 2

2.2 Automation in Food Service 3

2.3 Health and Safety Standards 4

2.3.1 Guidelines for Physical Bodily Harm 4

2.3.2 Guidelines for Environmental Hazards 5

2.3.3 The Importance of Workplace Safety 6

2.4 Food Safety and Sanitation Standards 6

2.4.1 The United States Food Code 6

2.4.2 The National Sanitation Foundation 7

2.5 Prior Designs 7

2.5.1 The Older Models 7

2.5.2 Fast Food Salting Methods 9

2.5.3 Summary of Salting Methods 10

2.6 Functional Requirements 10

2.6.1 Functions of the Device 10

2.6.2 Safety of the Device 11

2.6.3 Convenience of the Device 12

2.6.4 Marketability of the Device 13

3.0 - Preliminary Design Choices 14

3.1 Types of Motion 14

3.2 Preliminary Concepts 14

3.2.1 Roberts Straight-line motion 14

3.2.2 Crank-Slider Motion 15

4.0 - Selecting a Final Design 16

4.1 Final Design Choices 17

4.1.1 Refined Roberts Motion Design 17

4.1.2 Refined Crank Slider Design 18
4.2 Decision Matrix 18
4.3 Computer Aided Design Model 19

5.0 - Analysis 20
5.1 Torque Calculations 20
5.1.1 - Angular Position, Velocity, and Acceleration 20
Figure 16: Coupler and Crank Angular Motion vs. Crank Angle 22
5.1.2 - Centers of Gravity Position, Velocity, and Acceleration 22
5.1.3 - The Virtual Work Equation 23
5.2 Beam Deflection Analysis 25
5.3 Buckling Analysis 26

6.0 - Testing and Construction 28
6.1 Base Construction 28
6.2 Rapid Prototyping 28
6.3 Crank Slider Construction 31
6.4 Programming and Electronics 31
6.5 Mechanism Performance 32
6.5.1 Crank Mechanism 32
6.5.2 Dispenser Mechanism 32
6.5.3 Electronics Performance 32
6.6 Prototype Refinement 33

7.0 - Results and Recommendations 34
7.1 - Results 34
7.2 - Recommendations 34
7.2.1 - Machine Rather than 3D Print 34
7.2.2 - Electrical Hardware 34
7.2.3 - Slider Stability 35
7.2.4 - Create a Custom Dispenser 35
7.2.5 - Assembly of Angle Support 35
7.2.6 - Improve Aesthetics Appeal 35

8.0 - Conclusion 36

Works Cited 37

Appendices 39
Appendix A: Authorship 39
Appendix B: CAD Drawings 42
Appendix C: Calculations 51

Acknowledgements

The team would like to thank their advisor Prof. Eben Cobb for providing valuable insight and feedback on the design and analysis of their mechanism as well as his support and enthusiasm throughout the year. The project would not have been successful without him. The team would also like to thank Barbara Furhman for her aid in the order and distribution necessary components for the project. Her timely and friendly aid enabled a smooth completion of the project. The team would also like to thank Jacqui Goodwin and Spencer Austin for their aid in using and troubleshooting the Higgins Desktop Additive Manufacturing machines that allowed the team to successfully print unique components for their design. Lastly, the team would like to thank all of their professors, friends, and family for their constant support and encouragement over the course of their project.

Abstract

Our project was focused on automating the application of seasonings in a fast food setting. We created a linear zero-offset four-bar slider crank design that uses a motor to drive the mechanism. Before constructing our design, we conducted various analyses to determine torque necessary to run the mechanism and limit potential mechanical failures. We determined that our mechanism would require a maximum torque of approximately 30 in-lb. We used aluminum T-slotted frames, 6063 aluminum bars, custom 3D printed ABS plastic parts, a motor, servo motor, raspberry pi controller, relay, and various fasteners to construct and assemble our mechanism. Our mechanism was able to translate along the full slider path, although its motion was not as smooth as desired. Our salt dispersal mechanism functioned adequately and was able to control the flow of seasonings across the designated area.

List of Figures

Figure 1: McDonald's Automated Drink Dispenser.……10
Figure 2: Order Displays……11
Figure 3: Permissible Noise Exposure……...12
Figure 4: Traditional Salt Shaker……...15
Figure 5: Hand Crank Salt Shaker……15
Figure 6: Smalt Salt Dispenser.....16
Figure 7: Fast Food Salt Dispenser……....17
Figure 8: Robert's Straight Line Motion Mechanism……21
Figure 9: Initial Sketch of Robert's Straight Line Concept……...22
Figure 10: Basic Crank Slider……23
Figure 11: Initial Sketch of Crank Slider Concept……23
Figure 12: Robert's Straight Line Motion Sketch with Driver Dyad……24
Figure 13: Refined Crank Slider Sketch……25
Figure 14: Three Dimensional Model of Final Concept Mechanism……26
Figure 15: Basic Offset Slider Crank Kinematic Diagram……27
Figure 16: Coupler Angular Motion vs. Crank Angle……...29
Figure 17: Slider Motion vs. Crank Angle……29
Figure 18: Torque of Open Configuration vs Crank Angle……...31
Figure 19: Torque of Crossed Configuration vs Crank Angle……...31
Figure 20: Crank SolidWorks Deflection Simulation……32
Figure 21: Coupler SolidWorks Deflection Simulation……33
Figure 22: Base Assembly……35
Figure 23: First Iteration Printed Motor Coupler……..36
Figure 24: Second Iteration Printed Motor Coupler……..36
Figure 25: Printed Dispenser Holder……37
Figure 26: Basic Printed Plug……37
Figure 27: Printed Servo Housing……..38
Figure 28: Assembled Slider Mechanism……..39
Figure 29: Refined Assembly ……41

List of Tables

Table 1: Decision Matrix……..……..26

1.0 - Introduction

Businesses constantly seek to improve efficiency to cut costs and improve profits. Businesses have sought these improvements through new and innovative means to reduce resource usage in terms of labor, materials, transportation, and other aspects. These businesses have used methods such as managerial practices, including lean manufacturing and 5S protocols, which improve the flow of production and streamline processes. Additionally, businesses have used advancements in technology to improve their operations and cut costs. Since the dawn of the industrial revolution, technological improvements have revolutionized production and expanded the capabilities of humanity. The use of the waterwheel to drive power and the usage of thread spinning machines turned the local economies of home produced goods into large scale facilities that could transport their goods across the country. Today, we may face a similar revolution with advancements in automation technology.

Over the last twenty years, automation has grown significantly. From large scale automation in factories to smaller scale automation for applications such as parking garage ticket dispensers, many jobs have become and are continuing to become automated via robots and repetitive machines. Automation of simple tasks has taken the opportunity away from low-skill employees, as employers often prefer the cheapness and reliability of robots. Furthermore, some tasks have endangered human workers in the past, while in other fields certain tasks may become too monotonous for human workers and they may lose productivity from boredom. The use of automation in these fields can protect human lives and increase efficiency overall. Robots can perform the jobs that a standard worker would not want to do and often can perform them better.

As technology expands, many people and businesses are turning to automation to cut costs and increase efficiency. Fast food industries in particular, which employ nearly four-million workers in the United States alone, have already sought to reduce the functions of individual employees and save money on wages[1]. Restaurants in general have already taken steps to reduce the need for wait staff through the use of customer operated touch screen displays[2]. In the fast-food industry, the majority of restaurant chains sell French fried potatoes. Fast food restaurants sell fries individually and in combination meals with other foods. As a result, restaurants must rapidly produce French fries to keep up with the demand of customers. One crucial component of serving French fries is the distribution of salt onto the fries. Employees must constantly add salt to fries on a daily basis, often regardless of the orders of individual customers because they are in such fervent demand. The automation of the salting process would reduce the duties of individual workers for each batch of fries produced each day. The reduction of workers' time spent on salting fries would enable substantial savings when applied globally to all the locations of various fast-food restaurant chains.

To guide our project, we developed the following goal statement. The goal of our project is to develop an affordable, reliable automated salt shaker for the purpose of reducing time spent on salting French fries at fast food chains.

---

[1] IBISWorld. (n.d.). Number of employees in the United States fast food restaurant industry from 2004 to 2018*. In Statista - The Statistics Portal. Retrieved October 26, 2017, from https://www.statista.com/statistics/196630/number-of-employees-in-us-fast-food-restaurants-since-2002/.

[2] Nextep Systems. (2017). Home Page NEXTEP SYSTEMS. Retrieved October 26, 2017, from https://www.nextepsystems.com/

2.0 - Background Chapter

2.1 The Fast Food Industry

The fast food industry has grown significantly since its inception in 1921 with the first White Castle restaurant which operated much differently from the standards of fast food today[3]. White Castle "created a model for the chain restaurant, creating a standard of uniformity among its many locations," but the fast food industry had yet to explode into a national phenomena[3]. In 1954, a small family run business in San Bernadine, California specialized in a limited menu of burgers, fries, and beverages to rapidly serve customers without delay[4]. By 1958, that company had sold over 100 million hamburgers and became known as McDonald's Corporation[4]. Today, McDonald's continues to thrive as the world's largest quick service restaurant franchise, or QSR, in both the United States and the world.

2.1.1 The Scope of Quick Service Restaurants

As of 2017, the fast food industry has several competing corporations serving different variations of food as quickly as they can. Nearly 200,000 QSR locations, which serve millions of people daily, actively operate in the United States[1]. Many of these franchises even have multinational presence with locations on every continent. McDonald's alone has more than 36,000 locations spread across approximately 100 countries[5]. The fast food industry continues to expand to new territories as demand for quick, relatively inexpensive food increases.

2.1.2 Fries: A Fundamental Fast Food

Many quick service restaurants serve French fries in addition to other meal items or as individual orders. Restaurants, such as McDonald's, Burger King, Wendy's, Sonic, and more have included fries as the standard side order for nearly all of their available meals. Due to this usage in such an efficient and profitable industry, French fries have become the most significant usage of all processed potatoes[6]. French fries make up approximately one half of all potatoes sold for processing and approximately one fourth of all potatoes sold in the United States[6]. In fact, during 2015, 15 billion pounds of approximately 28 billion pounds of potatoes sold for processing purposes became French fries of every variety in the United States, including those sold at fast food restaurants[6]. French fries make up a significant part of the fast food industry and the potato industry in general, therefore QSR corporations value any means of increasing their efficiency of production and sale.

---

[3] Ohio History Connection. (n.d.). White Castle. Retrieved October 26, 2017, from http://www.ohiohistorycentral.org/w/White_Castle

[4] McDonalds, Inc. (2017). Our History. Retrieved October 26, 2017, from https://www.mcdonalds.com/us/en-us/about-us/our-history.html

[5] McDonalds, Inc. (2017). Discover McDonald's Around the Globe: McDonald's. Retrieved October 26, 2017, from http://corporate.mcdonalds.com/mcd/country/map.html

[6] National Potato Council. (2017). 2017 Potato Statistical Yearbook. Retrieved October 26, 2017, from http://www.nationalpotatocouncil.org/files/4315/0030/7222/Potato_utiliz_U.S.pdf

2.2 Automation in Food Service

Across the globe, numerous companies have begun developing new technologies to automate tasks that manual laborers have conducted in the past. Machines that can perform simple, repetitive tasks require less financial investment and provide more reliable operation than employees who may make mistakes and requires training. Furthermore, machines do not require payment and can operate constantly with proper maintenance.

Many examples of automation have replaced or supplemented worker's jobs including in the fast food industry. Some fast food restaurants have automated drink dispensers and self-order tablets/computers. Automated drink dispensers allow workers to reduce labor in regards to beverages by limiting input to the type and size of the drinks ordered by a customer. While the machine operates, the employee can use their time to complete other tasks in the restaurant, effectively cutting down on the amount of time required per order and improving overall productivity.

Figure 1: McDonald's automated drink dispenser[7]

Secondly, new self-service ordering tablets allow for customers to avoid lines, order their meals from their tables, and pay for their meals without using a second of employee time. This development cuts down on the required number of cashiers at an establishment down to a fraction of the previous requirement. Consumers have begun taking advantage of the new automation more every year, but human cashiers remain in demand and will for some time. With the expansion of automation in the fast food industry, companies will yield greater profit margins and with more reliable and efficient service that may invalidate the need for human employees.

[7] Automatic Drink Dispenser. (n.d.). Retrieved October 26, 2017, from https://i.ytimg.com/vi/akv4vSXa5a4/maxresdefault.jpg

Figure 2: Order Displays[8]

2.3 Health and Safety Standards

Commercial operations in the United States must follow certain guidelines as far as maintaining the health and safety of employees in the workplace or face legal repercussions. Workers have the rights to expect a certain level of protection in regards to their personal safety and health in their place of employment under the Occupational Safety and Health Act of 1970, commonly known as OSHA[9]. Employers must eliminate and reduce potential hazards to employees that may occur in their workplace as well as provide proper training and personal protective equipment, also referred to as PPE[10].

2.3.1 Guidelines for Physical Bodily Harm

In a restaurant setting, OSHA standards significantly impact the process of adding new machinery revolve around direct harm that the machinery can cause through the machine's operation including. Machinery that will operate in a restaurant setting must not have sharp edges that can cause lacerations on employees operating the machinery or otherwise coming in contact with the machinery during normal operation of the device[10]. New machinery also has the potential for nip points that can cause harm by pinching or catching skin or muscle tissue in moving components[10]. OSHA standards recommends engineering solutions, such as chamfered or filleted edges and guards, to remove the safety concerns on machines that have sharp edges, rotating parts, or nip points where an employee will likely come in contact with the machine[10].

---

[8] McMullen, M. (2017, October 10). Order Up: Digital Kiosks Coming to Fast Food Restaurants. Retrieved October 26, 2017, from http://www.iotsolutionprovider.com/retail/order-up-digital-kiosks-coming-to-fast-food-restaurants

[9] Occupational Safety and Health Administration. (2016). Worker's Rights. Washington, District of Columbia: United States Government. Retrieved October 26, 2017, from https://www.osha.gov/Publications/osha3021.pdf

[10] United States Government. (2017). UNITED STATES DEPARTMENT OF LABOR. Retrieved October 26, 2017, from https://www.osha.gov/pls/oshaweb/owasrch.search_form?p_doc_type=STANDARDS&p_toc_level=1&p_keyvalue=1910

This information led us to develop functional requirements fourteen and twenty to prevent bodily injury with the operation of our project.

2.3.2 Guidelines for Environmental Hazards

OSHA standards also determine what employers can expose their employees to in the work environment, especially in terms of air quality. OSHA requires employers to limit employee exposure to certain toxic materials or fumes that cause serious health concerns when inhaled. OSHA requires that workplaces have “Air of such purity that it will not cause harm or discomfort to an individual if it is inhaled for extended periods of time” including proper ventilation and limiting excessive dust and hazardous gaseous or particulate substances[10]. Lead, a known carcinogen, can cause severe damage when inhaled or otherwise ingested, even in particulate doses. OSHA standards state that employers “shall assure that no employee is exposed to lead at concentrations greater than fifty micrograms per cubic meter of air (50 ug/m3) averaged over an 8-hour period” to ensure the health of workers in the future. In addition to air quality, employers also must limit the auditory environment of the workplace. OSHA specifies ranges of decibels that employees can experience during operations depending on the duration of time that the employees hear the sound[10]. The chart, shown below, determines acceptable decibel levels in the workplace from OSHA standards. These standards led us to develop functional requirement nineteen to prevent long term health effects caused by the operation of our project.

TABLE G-16 - PERMISSIBLE NOISE EXPOSURES (1)

Duration per day, hours	Sound level dBA slow response
8	90
6	92
4	95
3	97
2	100
1 1/2	102
1	105
1/2	110
1/4 or less	115

Footnote(1) When the daily noise exposure is composed of two or more periods of noise exposure of different levels, their combined effect should be considered, rather than the individual effect of each. If the sum of the following fractions: C(1)/T(1) + C(2)/T(2) C(n)/T(n) exceeds unity, then, the mixed exposure should be considered to exceed the limit value. Cn indicates the total time of exposure at a specified noise level, and Tn indicates the total time of exposure permitted at that level. Exposure to impulsive or impact noise should not exceed 140 dB peak sound pressure level.

Figure 3: Permissible Noise Exposure[10]

2.3.3 The Importance of Workplace Safety

Since 1970, the United States government has worked to make workplace safety a necessity for employers[9]. In the United States in 2015, 3% of all restaurant and food service workers receive and injury or illness while working[11]. Injuries and illnesses can drastically impact people's lives and nobody should face unnecessary dangers on the job. Everyone has the rights to life, liberty, and the pursuit of happiness and employers should work to limit any drastic accidents that can impact these unalienable rights. In addition, preventing injuries also makes sense from a business standpoint because injuries can keep people from working and producing profits. Any addition of machinery to a workplace in any field must take into account the various requirements to maintain the health and safety of those that work within close proximity of the machine. The information that we gained from researching OSHA standards motivated us to place safety as a primary concern, along with functionality, in our designs for our project.

2.4 Food Safety and Sanitation Standards

In addition to protecting the safety of employees in the workplace, businesses must consider the safety of consumers. Businesses must protect the public from harm caused by their products for both ethical and legal reasons. The United States government and other public organizations have created codes similar to OSHA guidelines to ensure that businesses protect the safety of their customers. The food service industry follows a number of rules under United States and international organizations.

2.4.1 The United States Food Code

All equipment that comes into contact with food in a restaurant setting must also meet strict guidelines to prevent contamination onto food substances. Restaurants must comply with numerous categories of food safety and sanitation standards including federal, states, and sometimes city levels. Massachusetts began following the federal Food Code in 1999, which details proper conduct in a restaurant setting[12]. Notably, the Food Code declares that "equipment shall be located and installed in a way that prevents food contamination and that also facilitates cleaning the equipment and establishment" and that "food contact surfaces of equipment shall be protected from contamination" to prevent illnesses associated with contamination[12]. The Food and Drug Administration, FDA, specifies in the 2013 Food Code that equipment in contact with food substances must "be safe, durable, corrosion resistant, nonabsorbent, sufficient in weight and thickness to withstand repeated ware washing, finished to have a smooth easily cleanable surface, and be resistant to pitting, chipping, crazing, scratching, scoring, distortion, and decomposition[13]". Food service equipment must meet all of these requirements of restaurants can

---

[11] U.S. Department of Labor. (n.d.). TABLE 1. Incidence rates of nonfatal occupational injuries and illnesses by industry and case types, 2015 (United States, Department of Labor, U.S. Bureau of Labor Statistics). Retrieved October 26, 2017, from https://www.bls.gov/iif/oshwc/osh/os/ostb4732.pdf

[12] Massachusetts Government. (1999). STATE SANITARY CODE CHAPTER X - MINIMUM SANITATION STANDARDS FOR FOOD ESTABLISHMENTS (United States, Massachusetts Government, Department of Public Health). Boston, MA: Department of Public Health. Retrieved October 26, 2017, from http://www.mass.gov/eohhs/docs/dph/regs/105cmr590.pdf

[13] United States Government. (2013). Food Code 2013 (United States, Food and Drug Administration, U.S. Public Health Service). Washington, Distri: Food and Drug Administration. Retrieved October 26, 2017, from

face government repercussions for compromising the safety of their products sold to the public. These standards led us to develop functional requirements seventeen and eighteen to prevent food contamination and comply with federal guidelines.

2.4.2 The National Sanitation Foundation

Material properties also limit the creation and implementation of new machinery in a restaurant. The National Sanitation Foundation, NSF, provides additional requirements internationally, in addition to the FDA food codes, that restrict food service equipment especially in composition. The document NSF51 governs the materials used to fabricate food equipment. NSF51 states that food equipment must consist of materials that, "may not reasonably be expected to result, directly or indirectly, in their becoming a component of food, or otherwise affecting the characteristics of food" to maintain food quality and protect public health[14]. It also prohibits the use of lead, mercury, cadmium, and arsenic from use in food equipment. The materials that the NSF permits in food usage must also meet stringent requirements. The NSF declares that stainless steel used in food service equipment must have a chromium content of at least 16%[e]. The NSF also states that materials must resist corrosion and clean easily, in accordance with the FDA food codes. The food safety requirements of a restaurant setting limit the designs of new machinery that would enable increased efficiency and automation. This information led us to create functional requirements fifteen and sixteen to prevent food contamination and meet international standards.

2.5 Prior Designs

2.5.1 The Older Models

From simple, hand-held salt shakers to more advanced automated dispensers, salt dispenser techniques have many different iterations and designs. Many people recognize the most common and simple version of the salt shaker from using it at home, in restaurants, and nearly every place that people eat food. They often contain only a couple of ounces of salt and require manual operation by a person physically shaking the container over their food. Often sold in a matching pair with a pepper dispenser, salt shakers became popular in the 1930's and have remained largely remained unchanged since then. From this design, we can glean that the use of gravity through a small opening is a reliable way to dispense salt.

---

https://www.fda.gov/downloads/Food/GuidanceRegulation/RetailFoodProtection/FoodCode/UCM374510.pdf

[14] National Sanitation Foundation. (2014, October 5). NSF/ANSI 51 - 2014 Food Equipment Materials [Public health and safety- based risk management solutions]. Michigan, Ann Arbor.

Figure 4: Traditional Salt Shaker[15]

Secondly, some less common salt shaker operates through turning a hand crank mechanism. Usually used by cooks, the hand crank mechanism dispenses an almost constant stream of salt upon use. While not as mechanically simple as the standard handheld shaker, it can provide a more reliable supply of salt and the mechanism does not jam up as often as the simpler design. However, the shaker has a more complex and fragile container that can easily break. The hand crank design provides mechanical advantages over simpler designs, but requires more financial investment to produce or buy them for use. This design tells us that a mechanical crank used to dispense or grind salt can be helpful for our design.

Figure 5: Hand Crank Salt Shaker[16]

[15] Salt shaker on white background.jpg. (n.d.). Retrieved October 26, 2017, from https://commons.wikimedia.org/wiki/File:Salt_shaker_on_white_background.jpg

Some salt shaker manufacturers also have much more complex designs in development today. For example, the SMALT salt dispenser wirelessly links to a user's smartphone via Bluetooth and dispenses an exact amount of salt based on user input[17]. It does so by releasing a specific weight of salt with a gate. The salt then falls to the receiving area and is now accessible by the user pulling out a tab near the bottom of the device. The SMALT device can distribute accurately and has many other features. It can play music while linked to a smartphone and also serve as a light for a table in a dark room. It has a unique form of automation that can be applied in our design.

Figure 6: Smalt Salt Dispenser[17]

2.5.2 Fast Food Salting Methods

We went to local McDonald's restaurants and observed their French fry salting method. Each location used the same method and device to distribute salt over their fries. They fill the fryer with a bag of premade French fries. After the fries have cooked, an employee adds table salt to the fries using a handheld salt dispenser. This design only allows a predesignated amount of salt to pass through the device based on fittings within the device. The employees can change the fittings of the device if they require a different quantity of salt. The employee flips the dispenser 180 degrees to allow the salt to flow out and into the fryer. The employee does not perform any translational motion, as the handheld dispenser adequately spreads the salt over the fryer when dispensed from the center.

---

[16] Trudeau. (n.d.). Stress Less Enora Salt Mill. Retrieved October 26, 2017, from https://www.shoptrudeau.com/Stress-Less-Enora-Salt-Mill-p/0716024.htm

[17] Herb and Body. (2017). SMALT. Retrieved October 26, 2017, from http://www.mysmalt.com/

Figure 7:Fast Food Salt Dispenser[18]

2.5.3 Summary of Salting Methods

After looking at the other types of salt dispensers, we found that they all share the same basic design. Each device has a storage container that holds and dispenses an amount of table salt through the use of gravity and a mechanical release. The oldest, simplest models inversion of the device for use, because they only utilize gravity and no mechanical release. Some newer models do not require inversion, but both the crank dispenser and the SMALT dispenser have an opening that releases salt flow gravity. The model used in fast food appears simpler than the more modern and mechanical designs, however, restaurants use it because it allows for standardization across all fast food locations.

2.6 Functional Requirements

Our background research culminated in determining functional requirements that would limit the scope of our project. We have twenty-six functional requirements for our project, listed below:

2.6.1 Functions of the Device

1. The device must distribute salt evenly across a fry heater unit of about two square feet for an entire basket worth of fries.
    a. Coating all fries equally would guarantee quality to customer's fries and reliability on flavor, i.e. no over or under salted fries.
2. The device must operate eight hours a day for 98% of the days in a given year all of the time and not appear to impede on the action of adding fries to the storage location.
    a. We want the customer to appreciate the devices performance over a long period of time.
3. The device must distribute approximately 2.9 grams of salt in one operation.

[18] Imarcacom.ve. (n.d.). Handheld Salter. Retrieved October 26, 2017, from http://friday-ad.s3-website-eu-west-1.amazonaws.com/uploads/image/16374801_16374900/accusalt-sonoco-salt-dispenser-accusalt-shaker-mcdonald-s-salt-dispenser-16374886-1_800X600.jpg?df2cfaca1f68b24c

    a. McDonald's uses between 2.19 and 2.9 grams in each batch of fries based on our sources.
4. The salt shaker must add salt every time an employee adds new fries to the heat storage location.
    a. An employee adds new fries to the area approximately every 3 min 10 seconds according to unofficial sources
5. The device must allow a fryer basket of approximately 17.5"x12.875"x 6.125" to pass under the device and dispense its contents.
    a. The device must not impede the normal operation of the salting location.
6. The salt shaker must require less than 10 seconds of user input per batch.
    a. The salt shaker must act autonomously and perform as fast as the current method, yet not cause bodily harm from operation.
7. The device must move in a forward to backward motion.
    a. According to this images of McDonald's salters, it should be able to move back and forth to cover the entire fryer.
8. The device must function with use of power available in a fast food restaurant.
    a. Customers must be able to use the device at their businesses.
9. The device's driving mechanism must cause the mechanism to complete one cycle of motion in under fifteen seconds.
    a. It takes a worker 10-15 seconds and the operation must act as quickly as or faster than an employee.
10. The salt used by the device must be dispensed vertically from the device onto fries in a restaurant's fry storage area.
    a. Vertical dispersal it makes use of gravity to propel the salt and does not use a significant portion of the space in a fry storage area that employees must work within.
11. The device must not interfere with the heating of fries in the fry storage location.
    a. Many restaurants use heat lamps in their fry storage locations to keep large batches of fries from getting cold between sale of fries.
12. During power failure, the device must be operable in some form.
    a. The device should be able to operate manually during the loss of all power and the device may also be battery operated.
13. The device must not interfere with other equipment in a restaurant setting.
    a. If the device impedes the operation of a restaurant's other functions, people will not want to buy and use the device.
    b. A straight line mechanism would make the motion of the device easier to predict and organize other restaurant equipment around the device.

2.6.2 Safety of the Device

14. The product must not have sharp edges that could cause lacerations to the bodies of users.
    a. Hazardous machinery can injure employees and the operation of the customer's company.
15. The device must be constructed of food safe materials or have a food safe coating.
    a. In the foodservice contamination from any source can impact food safety.
16. The materials used to construct the device must not incur chemical reactions when exposed to salt water and common cleaning supplies.

    a. Chemical reactions with the device's materials may harm the integrity of the device or endanger the safety of people consuming fries in close proximity to the device.
17. The device must be capable of being cleaned, while assembled or be easily disassembled for cleaning.
    a. Failing to sanitize food equipment can cause illness in customers that consume contaminated food.
18. The materials used to construct the device must be non-corrosive.
    a. Corrosive materials can cause damage to other materials that they contact and can contaminate food.
19. The device's operation must comply with OSHA environmental safety standards.
    a. Dangerous noise levels and gases emitted by a device can cause long term health effects that harm employees and can lead to lawsuits.
20. The device's operation must comply with OSHA bodily harm standards.
    a. Lacerations or skin and muscle pinches can cause an employee harm and impede their functions in the workplace

2.6.3 Convenience of the Device

21. The total components of the device must fit within a box with less than 165 inches combined length and girth.
    a. UPS has a maximum size for packages of 165 inches calculated from (length + girth, where girth equals two times the width plus two times the height).
22. Attaching the device to preexisting French fry warmers must be simple with clear instructions, not require alteration of the warmers, and require only simple tools such as screws, an allen wrench, or screwdriver.
    a. Ikea makes furniture that require few to no tools and have descriptive diagrams.
23. The device must process general table salt found in everyday grocery stores e.g. Morton table salt.
    a. The machine needs to be designed for grains of salt the same size as those used by customers and account for any unique chemical properties of the salt versus other variations. We can easily acquire general table salt as well.
24. Assembly of the device should take ten to fifteen minutes to assemble and have in working order.
    a. Based on Ikea furniture setup times, it should take potentially 10-15 minutes for two people, assuming they understand the given instructions.
    b. If the device takes too much time to set up, it may disrupt the business of our customers.
25. The device must not be susceptible to spilling its contents accidentally.
    a. If the device creates a mess, then it would inconvenience customers.
26. Employees should be able to construct the device using only the supplied instructions and virtually no mechanical background.
    a. The device must be assembled correctly for operation and instructions must clear.
27. Assembly of the device should require only the use of a multi tool e.g. a Leatherman
    a. Customers should not be required to obtain specialized tools for use of this product because it would discourage people from buying it due to additional costs.

b. Some tools, such as screws, should be included with the mechanism.

2.6.4 Marketability of the Device

28. The device must have curved edges and no unnecessary parts that would dissuade the customer.
    a. We want the device to be attractive to customers, so that they will buy our device.
29. The device must not infringe on previous patents for salt shaker devices.
    a. We do not wish to cause any legal disputes with our device.
30. The device must cost less than $1000 to build.
    a. Our project has a budget $500 dollars from the school and up to $500 in additional funds from Professor Cobb.
    b. In addition, producing the device should be inexpensive so that customers do not believe an employee would be more cost effective.
31. The device must not appear unpleasant to a common consumer of the device.
    a. The appearance of the device may affect the overall marketability of the device even if the device performs all of its functions better than the current salting method of restaurants.

3.0 - Preliminary Design Choices

3.1 Types of Motion

Our initial study of prior designs for salt shakers showed that all of them use gravity assistance to dispense salt. Some had mechanical gates that could open and close upon use while others required being flipped 180 degrees to let the salt flow downwards and out. We want to build upon recent designs by still utilizing both a gate and gravitational assistance. This design choice means that our dispenser will only need to move laterally to spread salt across an area evenly.

Since our design only needs to move laterally, this means that we want to have a mechanism that allows for a straight line motion, or a similar motion. Types of motion that use curved motion may have merit, but for the purposes of dispensing salt across an area evenly it is more difficult to do so if the mechanism is following a curved coupler path. More complex paths, such as loops or crunodes, are unlikely to be useful for the dispenser.

3.2 Preliminary Concepts

We began designing our automated salt shaker by creating basic sketches that we then refined later in our process. We created two sketches that focus on two different types of straight-line motion because from our investigation into types of motion that other salt shakers have used, straight-line motion would intrude less on operations in a restaurant setting. Typical four-bar designs that do not specify straight line motion typically have complicated coupler curves that may intersect with the housing area for the French fries and may confuse workers as they attempt to work around the device especially when dispensing and removing fries. We sketched designs that must operate in a space that is approximately 1’ x 2’ x 2’ in volume and that allows a fryer basket of dimensions 17.5” x 12.875” x 6.125” to pass underneath it.

3.2.1 Roberts Straight-line motion

A Roberts Straight-line linkage makes use of strict dimensional requirements to ensure that a coupler point on the device moves in a straight line. In the following figure, the length ratios of each link are specified as well as the distances to the coupler point, P, from points A and B.

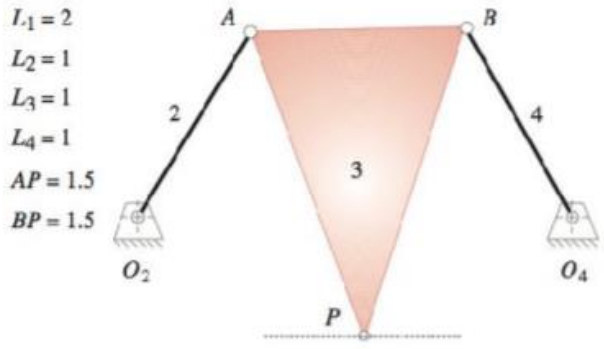

Figure 8: Robert's Straight Line Motion Mechanism[19]

We created a modified design of this example that does not have as low of a coupler point relative to the ground of the device. This sketch has a coupler that is less triangular and more trapezoidal in shape to allow for adequate space beneath it and house a funnel to dispense the salt from its center. The sketch maintains all of the necessary link ratios aside from the coupler point of the coupler link because then the device would intrude on the disposal of fries or fail to cover the entire area. We decided that the device could achieve its purpose with approximate straight line motion.

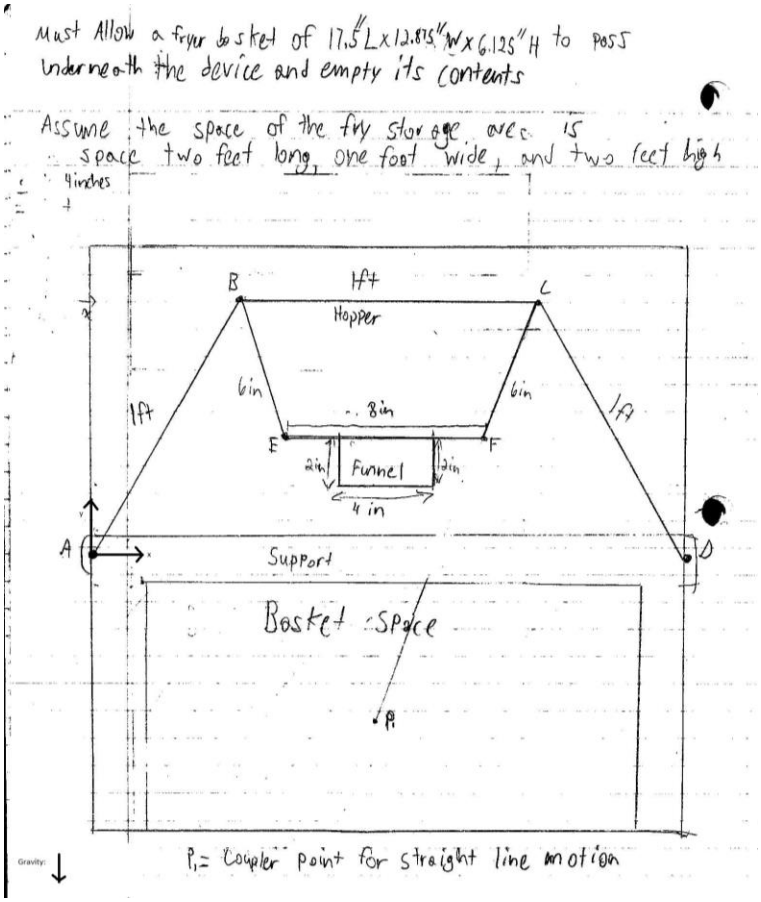

Figure 9: Initial Sketch of Robert's Straight Line Concept

3.2.2 Crank-Slider Motion

A crank-slider mechanism uses a rotating crank that pushes and pulls a slider along a straight line. Since this is a straight line motion, it has real potential to be useful to our project. Unlike many other straight line motions, the slider moves on a completely straight line rather than an approximation.

[19] Norton, R. L. (2012). Design of machinery: An introduction to the synthesis and analysis of mechanisms and machines. New York: McGraw-Hill.

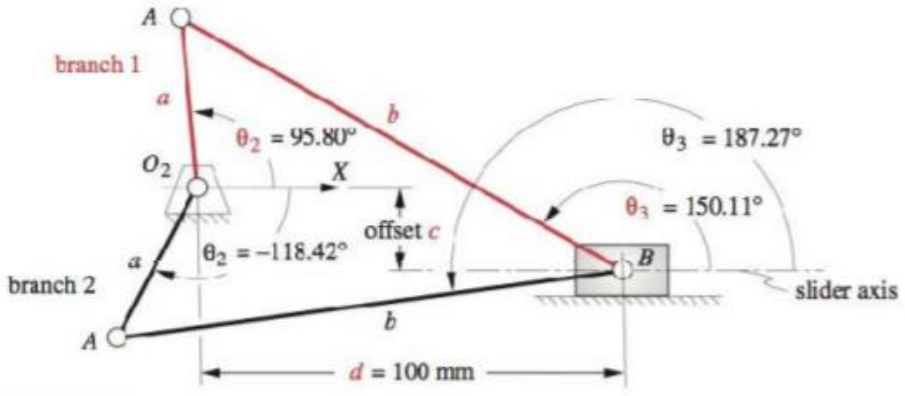

Figure 10: Basic Crank Slider[19]

In the sketches below is our design process for this type of motion. We went from a general idea of how a crank-slider might work to having a general measurements based on our background research. In this design, the salt would be placed in a hopper on top of the slider. Salt would be evenly dispensed by the opening of a gate and would flow downwards as the slider moves from one side of the fryer to the other during a couple of seconds.

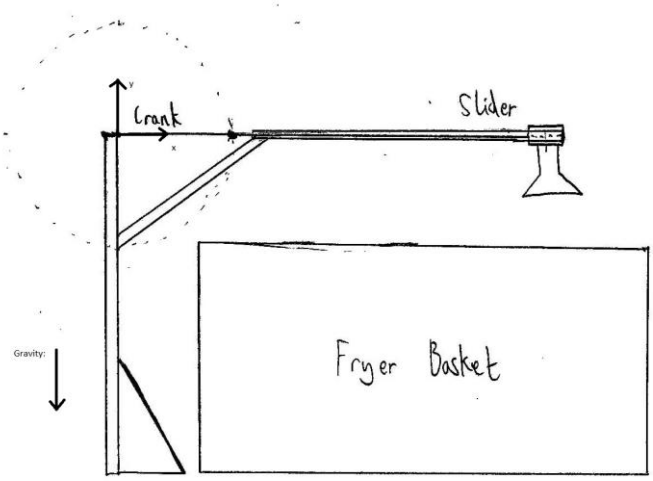

Figure 11: Initial Sketch of Crank Slider Concept

4.0 - Selecting a Final Design

4.1 Final Design Choices

After discussion as a group and determining that each design would serve to distribute salt evenly for the purpose of our project, we refined these two designs further by adding functional details that would help specify the cyclic motion of the devices as well as their dimensions.

4.1.1 Refined Roberts Motion Design

The most significant improvement on the Roberts Motion design is the addition of a driver dyad to the device. This dyad would attach to the motor and drive the straight-line motion of the device. We have also specified the dimensions for each aspect of the design. The new refined concept of the design also raises the question of anchoring the motor and driver dyad which we must consider when selecting a final design to pursue.

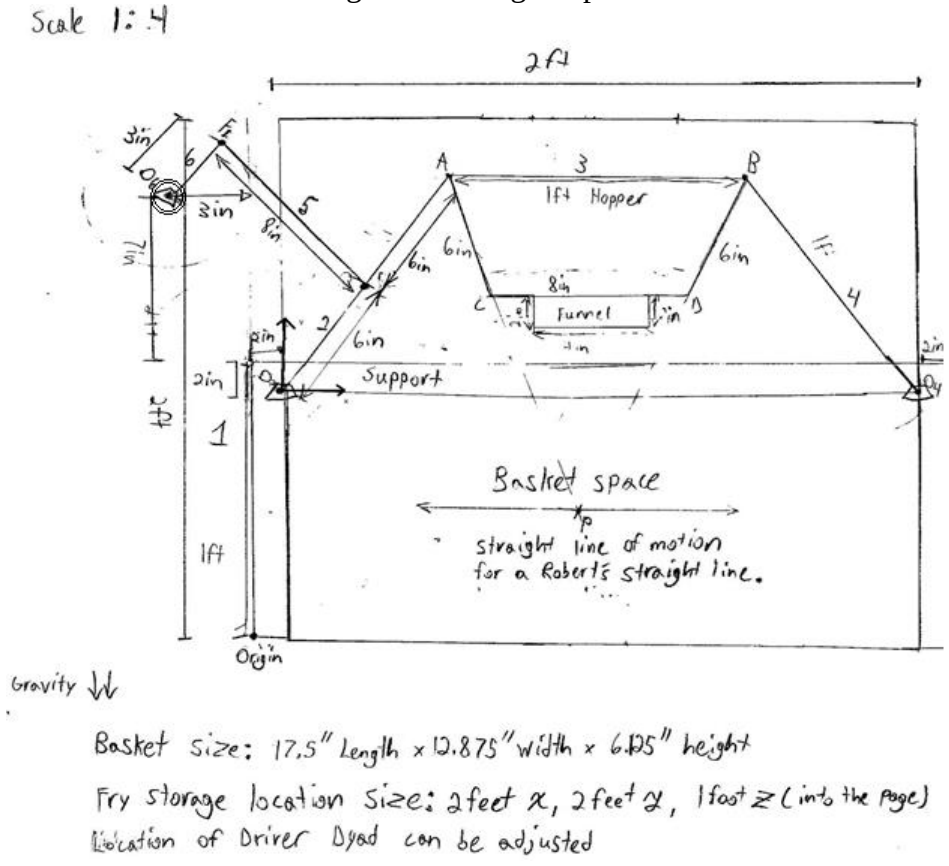

Figure 12: Robert's Straight Line Motion Sketch with Driver Dyad

4.1.2 Refined Crank Slider Design

We refined our sketch of the crank-slider mechanism to have additional dimensions for each linkage of the device and some associated angles that impact the design. We also added the origin, axes, and direction of gravity relative to the device.

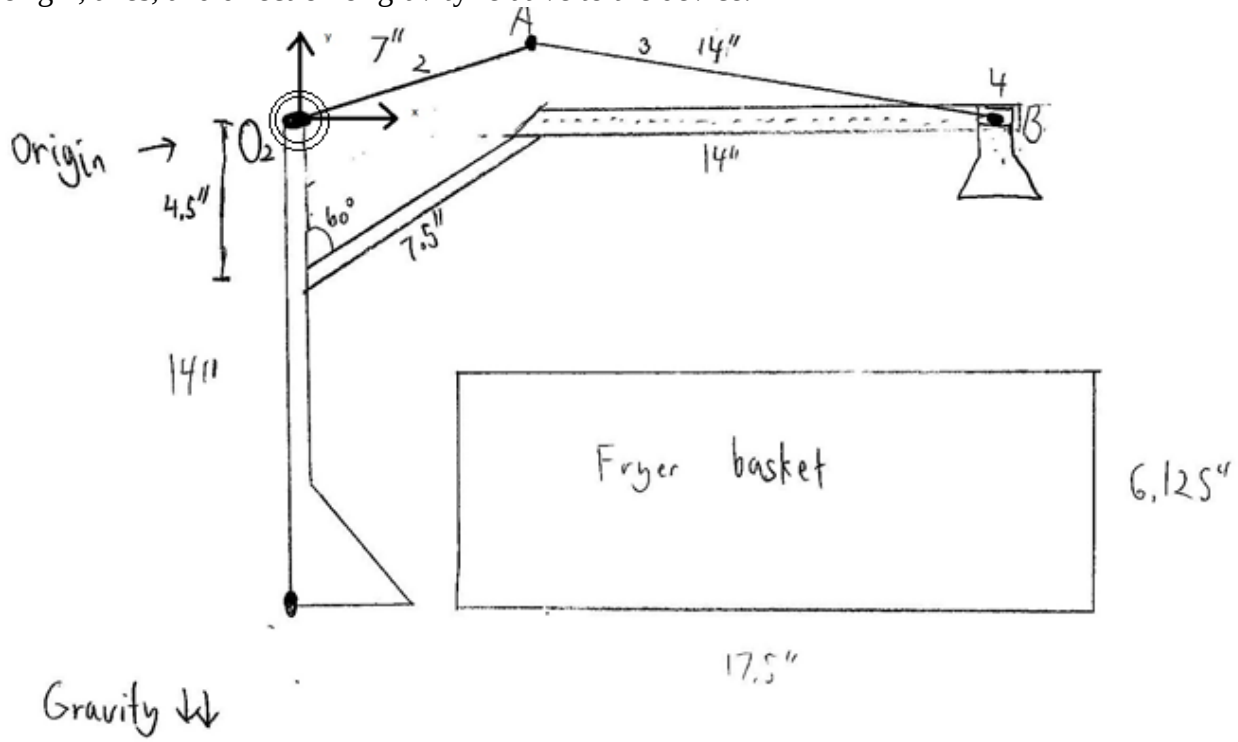

Figure 13: Refined Crank Slider Sketch

4.2 Decision Matrix

We evaluated the strengths and weaknesses of our two designs and also compared them to a generic four bar mechanism to determine how we should approach our final design of the device. We compared the designs in a decision matrix that had the categories of effectiveness, cost, safety, and marketability with various weighting factors. We valued the effectiveness of the device as the most important aspect of our design with a weighting factor of 40% because otherwise, a device that does not perform its job has no use. We valued cost second highest in our selection process with a weighting factor of 30% because we need to have the resources to produce our device. We valued safety and cost of our designs both at weighting factors of 15% because our designs will not likely cause harm aside from a small pinch and we will not market our design to outside buyers during this project, though it may occur after we complete it. After reviewing the results of our design matrix, we decided to focus on the Slider Crank Mechanism.

Decision Matrix	Effectiveness	Cost	Safety	Marketability	Total Score
Weighting Factor	0.4	0.3	0.15	0.15	1
Crank Slider Mechanism	8	7	6	7	7.25
Straight Line Six Bar	8	4	5	8	6.35
Generic Four Bar	5	6	7	4	5.45

4.3 Computer Aided Design Model

To better visualize our design in three dimensions, we created all the parts that we could foresee needing in our design using SolidWorks Modeling software, and assembled them to form our mechanism. Our initial model is as follows.

Figure 14: Three Dimensional Model of Final Concept Mechanism

We initially intended to mount a motor via brackets below the base and mount the coupler directly to the salt dispenser.

5.0 - Analysis

5.1 Torque Calculations

Using our final selected design, we underwent various calculations to determine how much torque was required to move our mechanism through the desired motion. We decided to evaluate our design based on an offset slider crank mechanism, where the offset distance is zero.

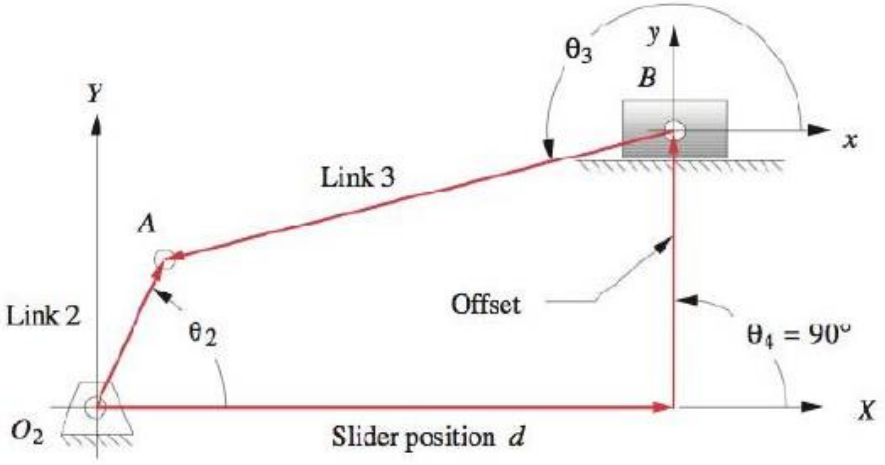

FIGURE P4-2

Problems 4-9, 4-10, 4-60, 4-61 Open configuration and terminology for a fourbar slider linkage

Figure 15: Basic Offset Slider Crank Kinematic Diagram[19]

This figure depicts an offset slider crank diagram with individual pieces labeled according to mechanical standards. The link labeled 2 is the crank because it is the shortest linkage and is often the link which motors are attached. The link labeled 3 is the coupler and has no direct contacts with the ground. The links labeled Offset and slider position are not physical links, but are formed by the slider and crank touching the ground. In our design, the offset link is zero.

5.1.1 - Angular Position, Velocity, and Acceleration

We began our analysis by conducting kinematic analyses of our design including position, velocity, and acceleration analysis. We performed our calculations with a starting crank angle, θ_2, of 20° and calculated through one full revolution, a crank length, b_2, of seven inches, a coupler length, b_3, of fourteen inches, an offset length, b_4, of zero, and a constant crank angular velocity, ω_2, of 30 rpm. Additionally, we calculated our analysis for both the open and crossed configurations of our mechanism. In the open configuration, no two links will cross over each other, while crossing occurs in the crossed configuration. Our torque analysis consisted of solving for the applied torque of the virtual work, Equation 1.

$$\sum_{k=2}^{n} F_k \bullet v_k + \sum_{k=2}^{n} T_k \bullet \omega_k = \sum_{k=2}^{n} m_k a_k \bullet v_k + \sum_{k=2}^{n} I_k \alpha_k \bullet \omega_k \quad (1).$$

Therefore, the majority of our calculations consisted of solving for the coefficients that are necessary for Equation 1. We began by calculating the angular position of the coupler, Equation 2, to determine the various other kinematic behaviors of the mechanism.

$$\theta_3 = asin\frac{(b_2*sin(\theta_2)-b_4)}{b_3} \quad (2)$$

Using the angular displacement of the coupler we calculated the angular velocity of the coupler and the linear position of the slider using equations 3 and 4 respectively.

$$\omega_3 = \frac{b_2*cos(\theta_2)*\omega_2}{b_3*cos(\theta_3)} \quad (3)$$

$$b_1 = b_2 * cos(\theta_2) - b_3 * cos(\theta_3) \quad (4)$$

We then used the angular velocity of the coupler to calculate both the acceleration of the slider and the angular acceleration of the coupler using equations 5 and 6.

$$d = -b_2 * \alpha_2 * sin(\theta_2) - b_2 * \omega_2^2 * cos(\theta_2) + b_3 * \alpha_3 * sin(\theta_3) + b_3 * \omega_3^2 * cos(\theta_3) \quad (5)$$

$$\alpha_3 = \frac{b_2*\alpha_2*cos(\theta_2)-b_2*\omega_2^2*sin(\theta_2)+b_3*\omega_3^2*sin(\theta_3)}{b_3*cos(\theta_3)} \quad (6)$$

The following figure details the results of our angular motion analysis associated with our design at thirty revolutions per minute and given our chose lengths for the mechanism. Omega 2 and Omega 3 represent the angular velocity of the crank link, attached directly to the motor, and the coupler link, attached to the crank and to the sliding mechanism, respectively over the rotation of the crank in angles. Alpha 2 and Alpha 3 represent the acceleration of the crank and coupler respectively, regarding rotation. The second figure details the motion of the sliding block of our mechanism. The graphs show the values of the block's motion in the x and y directions as well as the total magnitude of velocity of the block and the angle of the block as the angle of the crank rotates from 0 to 360 degrees.

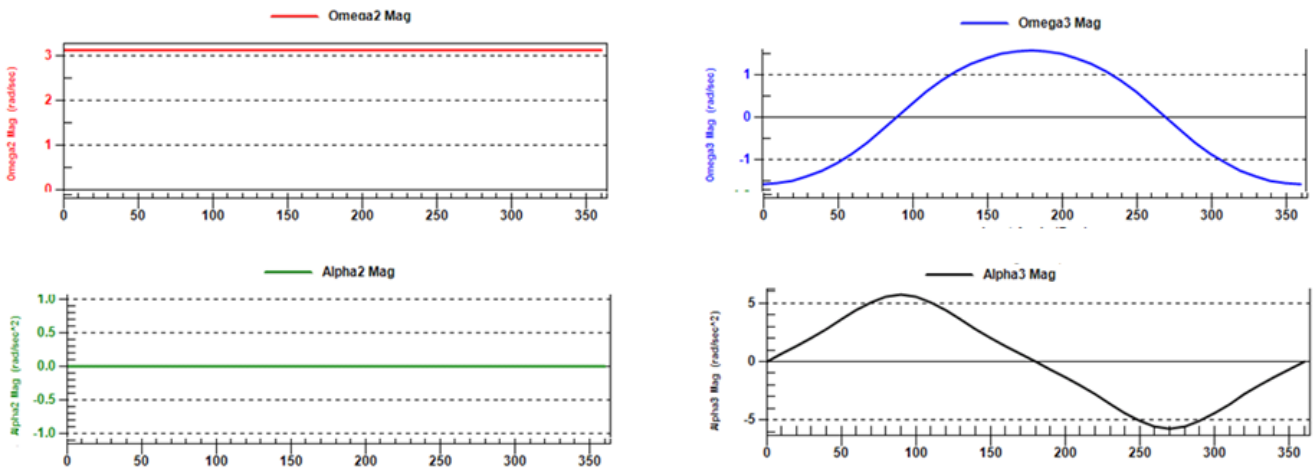

Figure 16: Coupler and Crank Angular Motion vs. Crank Angle

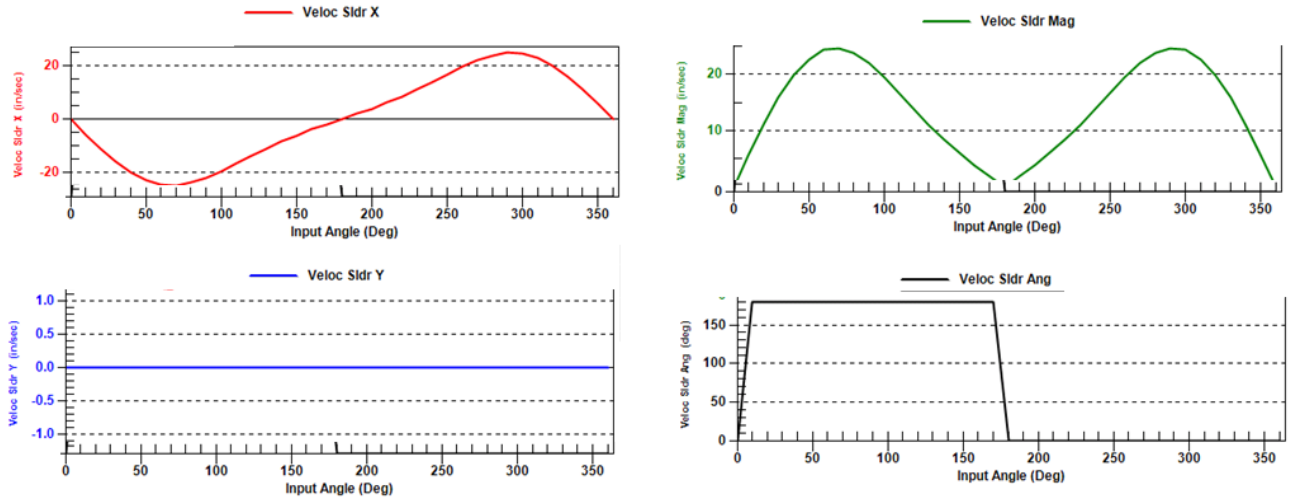

Figure 17: Slider Linear Motion vs. Crank Angle

5.1.2 - Centers of Gravity Position, Velocity, and Acceleration

The next phase of our analysis of the necessary torque was determining the motion behaviors of the various joints of our mechanism as well as the motion of their centers of gravity. The crank's center of gravity, G_2, is located 3.5 inches from either side of the crank and centered on the bar. The coupler's center of gravity, G_3, is located 7 inches from either side of the coupler and centered on the bar. Additionally, there is no angle offset between the ends of either crank and their respective centers of gravity, therefore $\delta_2 = 0$ and $\delta_3 = 0$. These values allowed us to solve for the velocity of the mechanisms pins at A and B which are the crank/coupler connection and coupler/slider connection respectively, using equations 7 and 8.

$$V_A = b_2 * \omega_2 * (-sin(\theta_2) + jcos(\theta_2)) \quad (7)$$

$$V_B = -b_2 * \omega_2 * sin(\theta_2) + b_3 * \omega_3 * sin(\theta_3) \quad (8)$$

We then calculated the velocities associated with the centers of mass of the crank, slider, and coupler, equations 9, 10, and 12, along with necessary intermediate calculation of the velocity of the coupler's center of mass relative to point A, equation 11.

$$V_{Gcrank} = G_2 * \omega_2 * (-sin(\theta_2 + \delta_2) + jcos(\theta_2 + \delta_2)) \quad (9)$$

$$V_{Gslider} = \quad (10)$$

$$V_{G3A} = G_3 * \omega_3 * (-sin(\theta_3 + \delta_3) + jcos(\theta_3 + \delta_3)) \quad (11)$$

$$V_{Gcoupler} = V_A + V_{G3A} \quad (12)$$

The acceleration values for each linkages' center of mass and point A were also necessary to determine for the virtual work equation, which we determined using equations 13 through 17.

$$A_{Gcrank} = G_2 * \alpha_2 * (-sin(\theta_2 + \delta_2) + jcos(\theta_2 + \delta_2)) - G_2 * \omega_2^2 * (cos(\theta_2 + \delta_2) + jsin(\theta_2 + \delta_2)) \quad (13)$$

$$A_{Gslider} = d \quad (14)$$

$$A_A = -b_3 * \alpha_3 * (-sin(\theta_3) + jcos(\theta_3)) + b_3 * \omega_3^2 * (cos(\theta_3) + jsin(\theta_3)) \quad (15)$$

$$A_{G3A} = G_3 * \alpha_3 * (-sin * (\theta_3 + \delta_3) + jcos(\theta_3 + \delta_3)) - G_3 * \omega_3^2 * (cos(\theta_3 + \delta_3) + jsin(\theta_3 + \delta_3)) \quad (16)$$

$$A_{Gcoupler} = A_A + A_{G3A} \quad (17)$$

After finding these accelerations, we returned to the Virtual Work Equation to determine the necessary values for our torque.

5.1.3 - The Virtual Work Equation

We used the Virtual Work Equation, shown below in equation 1, to determine the exact torque and external forces required to operate our mechanism using the information we determined in previous calculations.

$$\sum_{k=2}^{n} F_k \bullet v_k + \sum_{k=2}^{n} T_k \bullet \omega_k = \sum_{k=2}^{n} m_k a_k \bullet v_k + \sum_{k=2}^{n} I_k \alpha_k \bullet \omega_k \quad (1)$$

However, the full virtual work equation is unwieldy and can be simplified to better fit our design. Our design only requires the input torque of a motor acting on the system to operate it, therefore the summation of forces become zero and there is only one torque acting on the system leaving us with the following equation that gave us a value for torque.

$$T_{12} = \frac{m_2*(a_{G2x}*V_{G2x}+ a_{G2y}*V_{G2y})+ m_3*(a_{G3x}*V_{G3x}+ a_{G3y}*V_{G3y})+ m_4*(a_{G4x}*V_{G4x})+I_{G3}*\alpha_3*\omega_3}{\omega_2} \quad (18)$$

We processed our data into the following figures which depict the amount of torque from a motor necessary to operate our mechanism with a speed of thirty revolutions per minute versus the angle of the crank of the mechanism. The two graphs refer to different configurations of our mechanism that have the same dimensions, but are shown to have different motion and would require different torques. In the open configuration, no two links will cross over each other, while crossing occurs in the crossed configuration.

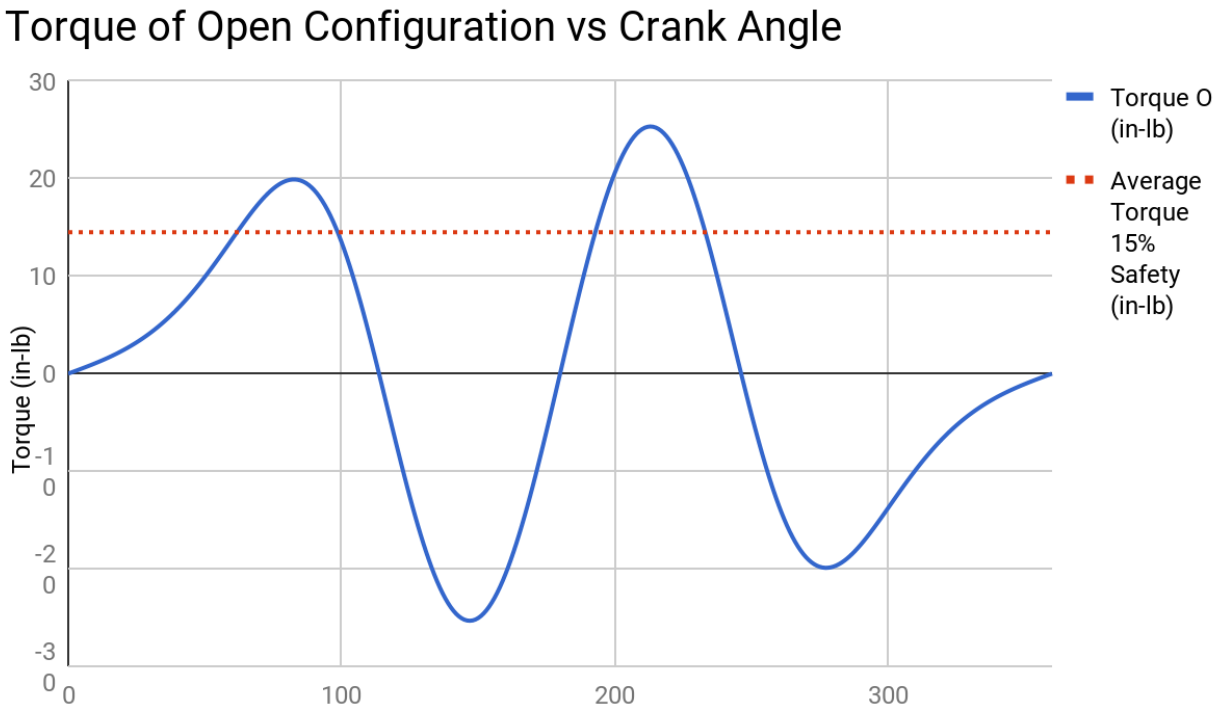

Figure 18: Torque of Open Configuration vs Crank Angle

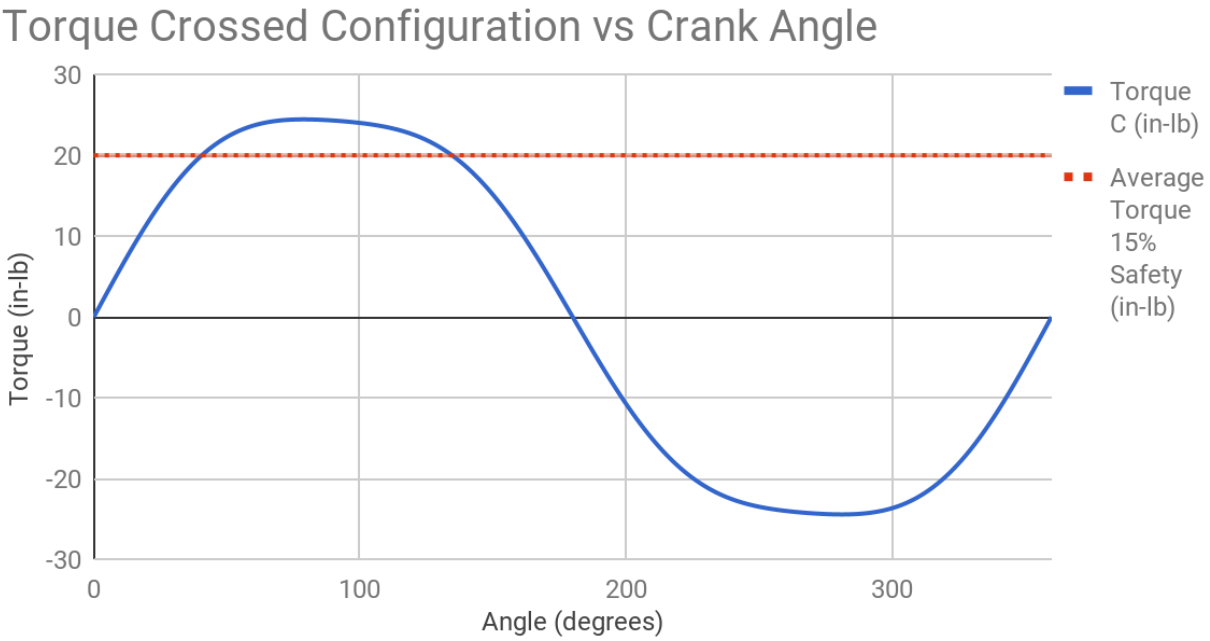

Figure 19: Torque of Crossed Configuration vs Crank Angle

This analysis led us to focus our efforts on an open configuration of the mechanism because it has a lower average torque at 14.5 in-lb compared to 20 in-lb required to operate the device. Additionally, we used a 15% safety factor in choosing motors that could supply this torque, which was 0.012 horsepower for the maximum torque of approximately 25 in-lb in both the open and crossed configurations. For more detailed calculations and data, see Appendix A.

5.2 Beam Deflection Analysis

In addition to the necessary torque to run the device, we were interested in possible failure mechanisms of the device. Catastrophic failure of the device was a concern if the device jams, yet the motor continues to run, therefore we conducted a beam deflection analysis on both the crank and coupler and modeled them as cantilever beams because in the case of jammed motion, they would be essentially supported on one side with a force applied at the other end. We also chose to model them as cantilever beams because this would enable us to determine the worst possible outcome of the device jamming. We calculated the possible deflection of each linkage using Equation 19.

$$\delta = \frac{F * L^3}{3 * E * I} \quad (19)$$

We determined that in the case of the crank, the maximum possible deflection if modeled as a cantilever beam with an applied force of 25 lb would be approximately 0.057 inches. In the case of the coupler, the maximum possible deflection if modeled as a cantilever beam with an applied force of 25 lb would be approximately 0.457 inches. We also compared our calculations to SolidWorks simulations of the same cantilever beam condition that determined that the crank would deflect approximately 1.067mm, 0.042in, and the coupler would deflect approximately 10mm, 0.39in. These values are relatively close to our hand calculations and allowed us to

continue with the construction of our mechanism. Figures of the SolidWorks simulations are shown in the following figures.

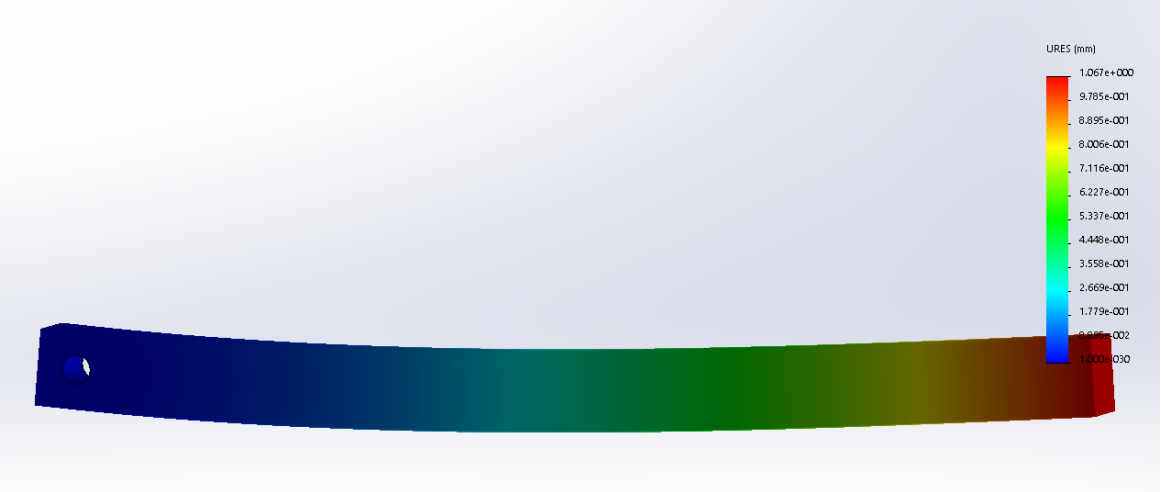

Figure 20: Crank SolidWorks Deflection Simulation

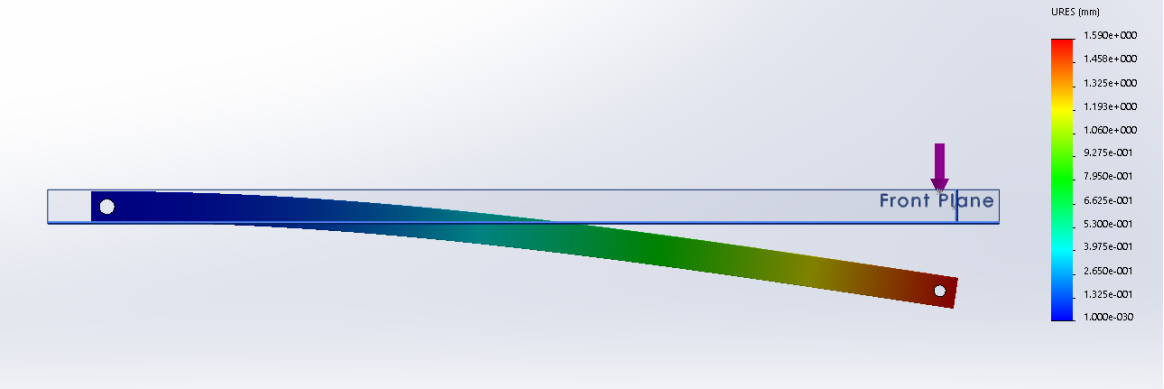

Figure 21: Coupler SolidWorks Deflection Simulation

5.3 Buckling Analysis

We were also concerned that the aluminum may buckle in the case of jamming, therefore we made a number of calculations regarding critical buckling forces and stresses on the beam. We began our analysis by using Euler's Column formula with our linkages being treated as fixed end supports because buckling would only occur in the case of a jam. Euler's Column formula is shown below, where n is equal to four when both ends are fixed.

$$F = \frac{n_s \pi^2 {}_s E_s I}{L^2} \quad (20)$$

From this equation we determined that an axial load of 10071 lbf would be required to cause buckling in our coupler and an axial load of 40284 lbf would be required to cause buckling in our crank. We deemed our mechanism safe from buckling because our required horsepower was unlikely to exhibit forces this high and would not occur primarily in the axial direction regardless. However, we sought further insight into buckling and conducted further calculations with regard to axial compression. From Robert Norton's Machine Design, we found a better approximation of axial loading that applied to our mechanism. The critical load for a beam that is

pinned at both ends is shown in Equation 21, where variable S_r is given by equation 22, and variable k is given by equation 23[20].

$$F = \frac{\pi^2 * E * A}{4 * S_r^2} \quad (21)$$

$$S_r = \frac{L}{k} \quad (22)$$

$$k = \sqrt{\frac{I}{A}} \quad (23)$$

Using these equations, we determined that a load of 2622 lbf would cause axial compression in the crank and a load of 655.6 lbf would cause axial compression in the coupler. These forces are much weaker than our predictions using Euler's Column formula, however, our mechanism would not likely incur axial compression because of the limitations of our selected motor which would output approximately nine foot pounds of work. After completing these analyses, we were comfortable moving our design into physical production and testing.

5.4 Shear Torsion Analysis

In order to be certain that the coupler we printed would be able to withstand the necessary load, we conducted a torsion analysis of the coupler when the motor is running. In doing so, we assumed the coupler to be approximately cylindrical and used the following equation:

$$\tau = Torque * D/((\pi/16)(D^4 - d^4)) \quad (24)$$

The applied torque was 102 in-lb, the inner diameter was 0.4 in, and the outer diameter, D, was 1.28 in. After doing so, the torsion in shear was determined to be 375 psi. The shear modulus of our coupler is 43,511 psi, so there is effectively no risk of the coupler breaking from torsion.

[20] Norton, R. L. (2014). Machine design: An integrated approach. Boston: Prentice Hall.

6.0 - Testing and Construction

6.1 Base Construction

After determining all the relevant forces and torques on our proposed mechanism, we decided upon the materials for our base assembly support the motor and four-bar mechanism. We ordered two T-slotted frames, that would make up the primary components of our base, as well as various connecting brackets to secure the frames and the assembly to a table. We also required various fasteners to secure the all of the connection pieces together, including ¼" screws and ¼" T-slot nuts. The single base bracket was attached to one T-slotted frame, oriented vertically, with two ¼" screws and it was secured to a table through using a C-clamp. The second T-slotted frame, has attached to the first at through eight ¼" screws and two right angle brackets. Additionally, we ordered a 12V DC motor, that was capable of delivering the required torque, a faceplate for mounting the motor, and an AC/DC converter. We mounted the motor to base assembly through using the motor face plate and two ¼" screws. During this process, we realized that mounting the faceplate of the motor parallel to the base frames would not allow the motor to run, therefore, we adjusted our initial design and secured the faceplate of the motor to T frame at an angle. Additionally, hook and loop fastening was used to attach the motor controller to the vertical T-slotted frame. All fasteners were tightened to ensure that they are secure.

Figure 22: Base Assembly

6.2 Rapid Prototyping

Our design required various unique parts that would inconvenient to machine and that we wished to test before committing our materials to permanent fixtures. We began by using ABS plastic to 3D print a coupler connection between our motor and aluminum crank. This design has a slot for the motor shaft to be placed within and a square slot perpendicular to the motor shaft that allows for the crank to be placed inside. Each connection has holes for set screws to secure the connections, though they were planned to be primarily held by the close fit of the design.

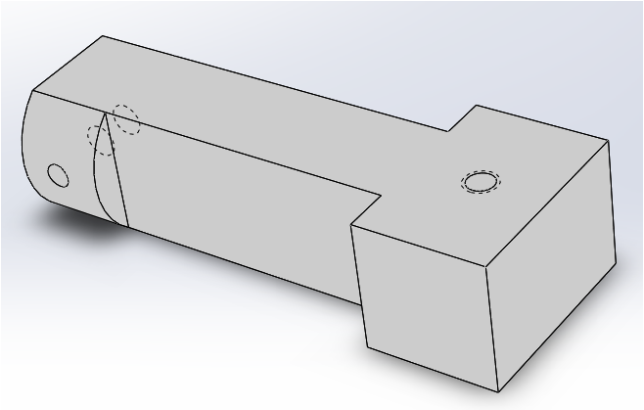

Figure 23: First Iteration Printed Motor Coupler

Our initial design, shown above, has a long connection between the points that connect the motor and the crank. The rounded side is where the motor shaft is inserted and the square protrusion is where the crank is inserted. However, after attempting to attach our print to the motor, we discovered that the fit was not tight enough to secure to either the crank or the motor shaft, and that the long connection would not allow for stable rotation of the crank along with the motor shaft. Therefore, we redesigned it to be smaller, have tighter tolerances of the holes, and make the connection more cylindrical to allow for our analyses to be more accurate to reality. Lastly, we rounded all the sharp edges of the design to remove high stress concentrations at those points.

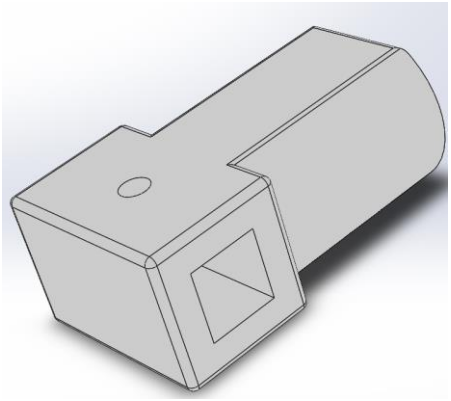

Figure 24: Second Iteration Printed Motor Coupler

The resulting design, shown above, allowed for tight connections between the motor shaft and crank, as well as an adequate transfer of rotation during operation.

We also printed a piece to hold our salt dispenser and connect it to the sliding pieces of the mechanism. The pieces have a round claw like portion that the dispenser can slide into and be held tightly and a rectangular back portion with ¼" holes to be secured to the sliding portion of the mechanism. The model of the part is shown below.

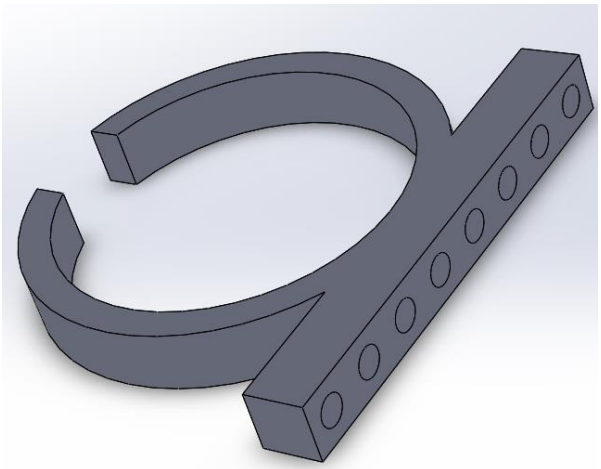

Figure 25: Printed Dispenser Holder

Next, we printed a basic plug for the salt dispenser which would be attached to the servo to move it up and down and subsequently alter the flow of the salt out of the dispenser during operation. It is a basic cylinder with a cone at the bottom that matches the funnel of the dispenser. We planned to attach it to the servo by drilling a small hole at the top of the cylinder and placing a small rod through it that the servo would push and pull.

Figure 26: Basic Printed Plug

Lastly, we designed a housing for the servo that would attach to the plug. The housing fits tightly onto the top edges of a salt dispenser that we purchased and fits the dimensions of our servo. There are cuts designed into the housing to allow for wires to be arranged in a way that does not obstruct operation.

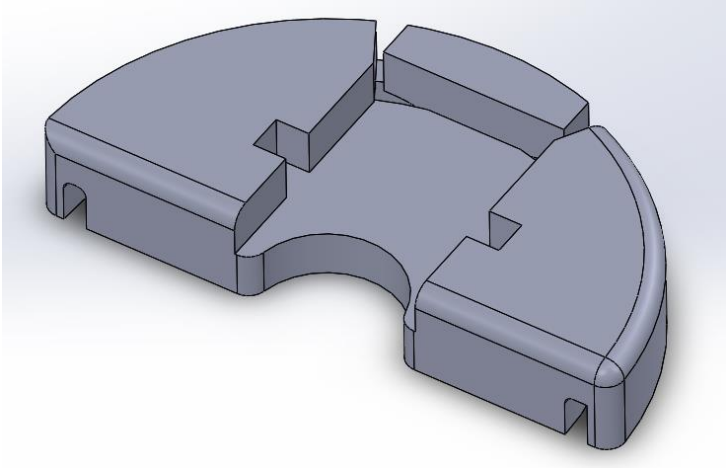

Figure 27: Printed Servo Housing

6.3 Crank Slider Construction

To construct the crank slider mechanism, we purchased 3’ long, ½” thick, ½” wide aluminum bars that we could cut to the desired lengths. We used a hacksaw to cut one aluminum bar into a 7” piece, a 14” piece, and then the remainder of the aluminum was reserved for potential alterations. We filed the cut faces of the bars to remove any sharp edges. We then drilled 5/16” holes into the long face of the 7” bar at one end and into the long face of the 14” bar at both ends. Once we had drilled the holes, we attached the two aluminum bars with an axle and couplers to serve as washers and spacers. The crank aluminum bar was secured to our printed motor shaft coupler through a tight fit and a #10 set screw to hold it in place. The free end of the coupler was attached to a thin aluminum plate which we cut to roughly * x * using ¼” screws. We also secured the coupler to the aluminum plate with another steel axle through a hole that we drilled and using shaft collars. The slider piece was also attached to the aluminum plate via ¼” machine screws. The slider fits onto the T-slotted frame of our base and can slide the majority of the length of the frame. Additionally, we attached a salt dispenser, which we purchased from a restaurant supply company and cut the top off of with a hacksaw, to the aluminum plate using a printed holder and ¼” machine screws.

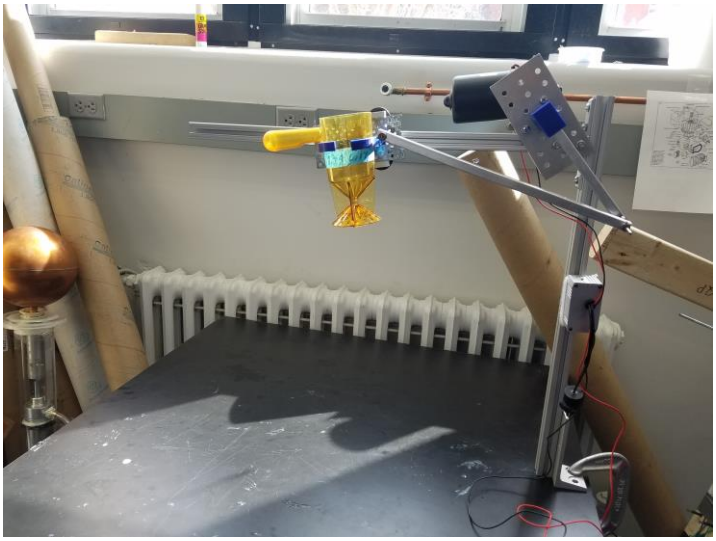

Figure 28: Assembled Slider Mechanism

6.4 Programming and Electronics

Our mechanism is designed to run off a program powered by a Raspberry Pi 3 system using Python. The way that it functions is that it moves the main arm by powering a motor through the use of a power relay. It powers the motor long enough to run it for one full length of the arm in order to dispense salt evenly.

For the dispenser itself, the Pi is linked to a Servo motor that can open and close the plug that restricts and controls salt dispension. The overall code is very simple by computer science standards, and only needs to effectively do three things. These are to run the dispenser the length of the arm, to release the salt, and to have an emergency off switch if something goes wrong.

Mechanically, the servo is attached to the printed plug with a screw that was packaged with the servo drilled into the plug at a height level with the servo mounting. The printed servo

housing is secured onto the top of the dispenser with the servo into the housing using adhesive. We arranged necessary wires along the coupler of the device in a way that would not hinder obstruction using tape.

6.5 Mechanism Performance

Once assembling the entirety of our mechanism, we ran the device using electricity from a 120V AC power outlet with a 12V DC converter that transmitted power to the motor, while the Raspberry Pi was operated with power supplied from a laptop with a micro usb cable. We operated the device for several cycles of operation and noted our observations.

6.5.1 Crank Mechanism

Upon fully assembling our slider mechanism with the motor and base, we manually ran the motor to determine if the mechanism would function properly. The first issue that we noticed was the lack of stability of the base with the added weight because it was supported as a cantilever beam. Secondly, the rotation of the coupler interfered with the rotation of the crank and a small collision occurred between the pieces. The operation of the sliding mechanism also operated only at 50% power or above and tended to shake in operation due to a slight imbalance in the weight on the slider.

6.5.2 Dispenser Mechanism

To get the dispenser function working properly, we first needed to refine the actual system that releases the salt. To do so, we secured the servo to the top of our plastic salt container with a 3D printed part. We needed a way to further secure the servo before it could function the intended way. We attached it using adhesives for the best results after trying elastic bands and more friction to keep it in place. Once the servo was secured, we began testing the salt flow. It was a relatively simple procedure. We adjusted the angle of the servo to increase or decrease the salt flow as desired. After sufficient trial and error, the dispenser mechanism operating at a desirable flow rate of about 2.9 grams of salt dispensed in twelve seconds.

6.5.3 Electronics Performance

We had significant difficulties operating the electrical components of our mechanism, particularly with controlling the operation of the motor using the Raspberry Pi. We first attempted to connect the Raspberry Pi to the motor through a compatible motor shield and run various Python scripts to operate the motor, however the motor was not responding to the electrical signals the Pi was outputting. Instead of rotation, the motor only responded with clicking noises from the electrical control box of the motor. Upon further investigation, we found that the motor shield was not outputting enough voltage to operate the motor. To combat this obstacle, we discovered that we could potentially operate the motor using the Pi through using an electrical relay, which operates similar to a switch but is operated electrically rather than mechanically. We then found what we believed was a suitable relay for our device that could handle and transmit the required voltages. However, when we began testing the relay, it was not passing a signal through it. We then discovered that the relay was not compatible with the 3.3V logic of the Raspberry Pi, but only functions with 5V logic from Arduinos and other similar devices. We then opted for more simplistic mechanical approaches to the control of the motor.

6.6 Prototype Refinement

Therefore, we decided to add an angle support connecting the horizontal beam back to the vertical beam and preventing any deflection of the base. We cut some of our spare aluminum bar to 13 ¾” and drilled two 9/32” holes into each end of the bar. This bar was then secured to the two aluminum T-slotted frames of the base with T-slot nuts that were tightened into place at an angle of 20°. To amend the operation of the crank mechanism, we added a rubber spacer between the aluminum coupler and crank and adjusted the steel axles to prevent intersection with the motor shaft coupler.

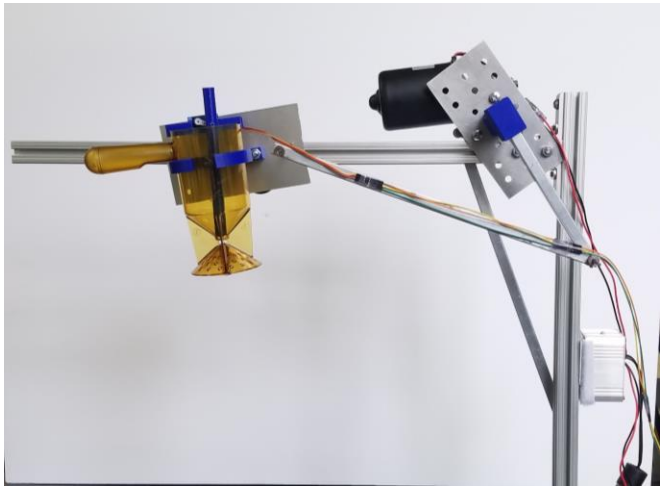

Figure 29: Refined Assembly

Additionally, upon discovery that the electronics that we intended to control the operation of the motor were not usable for our purposes, we decided to use a servo to manually attach the power wire connection. This design is sufficient for our purposes, and worked well during testing though it is inelegant in appearance and relatively inefficient.

7.0 - Results and Recommendations

7.1 - Results

Overall, we are very satisfied with the results and the majority of our design specifications have been met. In summary, the mechanism functions mechanically as intended with our design. The mechanism dispensed salt at a constant rate reliably across the given area that we determined in our design specifications. The slider moves at a predictable and variable speed with adjustments to a control knob on the motor. The electrical portion of our project is difficult and needs improvement, but is functioning in a simple manner. Given more time for the project we would adjust our electrical controllers to allow for running the devices using proper electrical means, such as the relay or motor controller we intended.

The dispenser mechanism operated differently than we anticipated. While the plug did cause the dispenser to retain salt, the salt was dispenses from the container during operation without the operation of the servo motor and plug. However, the dispenser ceased releasing salt upon the motor stopping. Therefore, we determined that the servo operation is not entirely necessary to the function of the device and we decided we would adjust the program for the servo to act as a failsafe for returning the plug to its original orientation. Additionally, this revelation of the design would change the ways that the amount of salt dispensed can be adjusted. If the servo and plug mechanism functioned as we intended, then we could adjust the Python code on the Raspberry Pi, however now the only current method to adjust the amount of salt dispensed is to adjust the amount of time that the motor is running.

7.2 - Recommendations

During this project, we ran into a number of difficulties and challenges that hindered our progress. If another team continued this project in the future, or if this project was moved toward further stages in the product life cycle, we recommend that a number of changes to the approach be made for increased efficiency and to improve the overall operation of the device.

7.2.1 - Machine Rather than 3D Print

The design we used has multiple intricate and complex parts that are difficult to fabricate. Because of this, we decided it was best to use 3D printing as our method of rapid prototyping. ABS plastic pieces made from a 3D printer are very strong, cheap, and light, but not as strong as we would have liked them to be. It is much easier to make it out of plastic rather than attempting to machine each of the parts out of another material, such as aluminum. The pieces that we ended up printing are the motor coupler, the dispenser plug, and the servo holder. Some pieces did need to be reprinted because of repeated stress application. So, we recommend taking the time to mill or lathe the pieces that we printed if there is sufficient time.

7.2.2 - Electrical Hardware

We decided to use Raspberry Pi as our controller because it is user friendly and relatively easy to pick up. For future projects, we recommend using an Arduino instead. Arduino controllers are compatible with more of the resources that can be found through WPI’s facilities

and it would have been easier to integrate with the motor itself that we used. This is because Raspberry Pi uses 3.3V logic for most things, however a lot of equipment runs on 5V logic instead.

7.2.3 - Slider Stability

Due to the in stability of the mechanism during its initial operation, we would recommend that a second slider should be used to stabilize the motion of the dispenser along the base assembly. A second slider would negate the shaking of the mechanism by allowing for a more linear motion of the sliding assembly's center of mass. This solution would cost another $56 to implement, but would improve the overall operation of the device. Alternatively, a slider piece with four roller connections as opposed to two could be used instead. We also recommend using a lubricant on the slider channels when using the mechanism over an extended period to reduce friction and enable smoother motion. Another possible solution would be to create a counterweight for the end of the sliding assembly that would balance the weight and keep the dispenser from lifting up during motion.

7.2.4 - Create a Custom Dispenser

The dispenser that we ordered worked well enough. It is able to support the salt and can maintain its shape through the repeatedly applied stresses of the mechanism. However, it would be better if it were made out of a stronger material that didn't bend from light stresses. The dispensation method itself is easy to replicate, and if a new dispenser is made it can be redesigned to house a servo or a simpler plug to dispense the salt. Rather than purchasing a dispenser and designing the plug and servo around it, a dispenser should be designed and fabricated to synergize with the other two. The better fit would also enable the servo to function as originally intended.

7.2.5 - Assembly of Angle Support

When assembling the mechanism together, the angle support causes some difficulty. Two people are currently required to assemble the device as a result, with one person holding the horizontal base and another maneuvering the angle support into place. This is due in part to the mounting of the motor, which hangs over the T-slot that the connects to the angle support. We would recommend that if this project and design were continued that an alternate means of mounting the motor or an alternate location for the angle support. Another means of addressing this issues could be to adding an additional vertical T-slotted frame to the other end of the vertical frame. Therefore, there would be better support inherently and an angle support could be placed at the joint between frames far away from the motor.

7.2.6 - Improve Aesthetics Appeal

The current assembly of our mechanism is not very aesthetically pleasing due to some rough cuts of pieces, numerous wires, and some screws that do not sit flush with surfaces. These issues could be amended if the design of the mechanism was furthered with cuts made with machinery rather than manually with hacksaws, create sleek metal housings for the controllers for the motor and servo motor, and use fasteners that are the proper length and that can be set

into associated connections. Having a sleeker exterior would help secure funding for furthering the design and would be beneficial if the design is marketed in the future.

8.0 - Conclusion

` Overall, we determined that our project was a success in designing and creating an automated salt shaker mechanism. We met nearly all of our designs specifications regarding the function of the device, the only specification that was not easily met was the amount of required user input per batch because of our difficulties with the electronic components of the mechanism. The use of servos touching the wires of the motor together is not as reliable and may take additional user input to reconfigure on occasion, but is fully functional. We also met nearly all of our functional requirements for the safety of the device. To our knowledge, the device meets all food and safety standards, but the use of ABS plastic is only defined as non-toxic. We did not find a clear indication for or against them being accepted for food safety standards. Additionally, the device could potentially cause harm with the speed it operates, though it is likely to be minor and can be amended if the controls of the device are fastened outside the range of motion for the mechanism. Additionally, the meets the majority of our design specifications regarding convenience and marketability, though there is one difficulty in construction of the device with the added angle bracket and some of the electric components are not elegantly arranged and operated. Given the time and resources to refine our mechanism we believe that our design could become a marketable product for the fast food industry. If our mechanism was combined with other innovations in fast food automation, then the fast food service industry could become entirely automated and maximize its efficiency.

Works Cited

1] IBISWorld. (nod). Number of employees in the United States fast food restaurant industry from 2004 to 2018*. In Statista - The Statistics Portal. Retrieved October 26, 2017, from https://www.statista.com/statistics/196630/number-of-employees-in-us-fast-food-restaurants-since-2002/.

2] Nextep Systems. (2017). Home Page NEXTEP SYSTEMS. Retrieved October 26, 2017, from https://www.nextepsystems.com/

3] Ohio History Connection. (n.d.). White Castle. Retrieved October 26, 2017, from http://www.ohiohistorycentral.org/w/White_Castle

4] McDonald's, Inc. (2017). Our History. Retrieved October 26, 2017, from https://www.mcdonalds.com/us/en-us/about-us/our-history.html

5] McDonalds, Inc. (2017). Discover McDonald's Around the Globe :: McDonald's. Retrieved October 26, 2017, from http://corporate.mcdonalds.com/mcd/country/map.html

6] National Potato Council. (2017). 2017 Potato Statistical Yearbook . Retrieved October 26, 2017, from http://www.nationalpotatocouncil.org/files/4315/0030/7222/Potato_utiliz_U.S..pdf

7] Automatic Drink Dispenser. (n.d.). Retrieved October 26, 2017, from https://i.ytimg.com/vi/akv4vSXa5a4/maxresdefault.jpg

8] McMullen, M. (2017, October 10). Order Up: Digital Kiosks Coming to Fast Food Restaurants. Retrieved October 26, 2017, from http://www.iotsolutionprovider.com/retail/order-up-digital-kiosks-coming-to-fast-food-restaurants

9] Occupational Safety and Health Administration. (2016). Worker's Rights. Washington, District of Columbia: United States Government. Retrieved October 26, 2017, from https://www.osha.gov/Publications/osha3021.pdf

10] United States Government. (2017). UNITED STATES DEPARTMENT OF LABOR. Retrieved October 26, 2017, from https://www.osha.gov/pls/oshaweb/owasrch.search_form?p_doc_type=STANDARDS&p_toc_level=1&p_keyvalue=1910

11] U.S. Department of Labor. (n.d.). TABLE 1. Incidence rates of nonfatal occupational injuries and illnesses by industry and case types, 2015 (United States, Department of Labor, U.S. Bureau of Labor Statistics). Retrieved October 26, 2017, from https://www.bls.gov/iif/oshwc/osh/os/ostb4732.pdf

12] Massachusetts Government. (1999). STATE SANITARY CODE CHAPTER X - MINIMUM SANITATION STANDARDS FOR FOOD ESTABLISHMENTS (United States, Massachusetts Government , Department of Public Health). Boston, MA: Department of Public Health. Retrieved October 26, 2017, from http://www.mass.gov/eohhs/docs/dph/regs/105cmr590.pdf

13] United States Government. (2013). Food Code 2013 (United States, Food and Drug Administration, U.S. Public Health Service). Washington, Distri: Food and Drug Administration. Retrieved October 26, 2017, from https://www.fda.gov/downloads/Food/GuidanceRegulation/RetailFoodProtection/FoodCode/UCM374510.pdf

14] National Sanitation Foundation. (2014, October 5). NSF/ANSI 51 - 2014 Food Equipment Materials [Public health and safety- based risk management solutions]. Michigan, Ann Arbor.

15] Salt shaker on white background.jpg. (n.d.). Retrieved October 26, 2017, from https://commons.wikimedia.org/wiki/File:Salt_shaker_on_white_background.jpg

16] Trudeau. (n.d.). Stress Less Enora Salt Mill. Retrieved October 26, 2017, from https://www.shoptrudeau.com/Stress-Less-Enora-Salt-Mill-p/0716024.htm

17] Herb and Body. (2017). SMALT. Retrieved October 26, 2017, from http://www.mysmalt.com/

18] Imarcacom.ve. (n.d.). Handheld Salter. Retrieved October 26, 2017, from http://friday-ad.s3-website-eu-west-1.amazonaws.com/uploads/image/16374801_16374900/accusalt-sonoco-salt-dispenser-accusalt-shaker-mcdonald-s-salt-dispenser-16374886-1_800X600.jpg?df2cfaca1f68b24c

19]Norton, R. L. (2012). Design of machinery: An introduction to the synthesis and analysis of mechanisms and machines. New York: McGraw-Hill.

20]Norton, R. L. (2014). Machine design: An integrated approach. Boston: Prentice Hall.

Appendices

Appendix A: Authorship

	Czajkowski	Lenthall
Abstract	X	X
1.0 - Introduction	X	X
2.0 - Background	X	X
2.1 The Fast Food Industry		X
2.1.1 The Scope of Quick Service Restaurants		X
2.1.2 Fries: A Fundamental Fast Food		X
2.2 Automation in Food Service	X	
2.3 Health and Safety Standards		X
2.3.1 Guidelines for Physical Bodily Harm		X
2.3.2 Guidelines for Environmental Hazards		X
2.3.3 The Importance of Workplace Safety		X
2.4 Food Safety and Sanitation Standards		X
2.4.1 The United States Food Code		X
2.4.2 The National Sanitation Foundation		X
2.5 Prior Designs	X	
2.5.1 The Older Models	X	
2.5.2 Fast Food Salting Methods	X	
2.5.3 Summary of Salting	X	

Methods		
2.6 Functional Requirements	X	X
2.6.1 Functions of the Device	X	X
2.6.2 Safety of the Device	X	X
2.6.3 Convenience of the Device	X	
2.6.4 Marketability of the Device	X	
3.0 - Preliminary Design Choices	X	
3.1 Types of Motion	X	
3.2 Preliminary Concepts	X	
3.2.1 Roberts Straight-line motion		X
3.2.2 Crank-Slider Motion	X	
4.0 - Selecting a Final Design	X	
4.1 Final Design Choices	X	
4.1.1 Refined Roberts Motion Design		X
4.1.2 Refined Crank Slider Design	X	
4.2 Decision Matrix	X	
4.3 Computer Aided Design Model		X
5.0 - Analysis	X	X
5.1 Torque Calculations		X
5.1.1 - Angular Position, Velocity, and Acceleration		X
5.1.2 - Centers of Gravity Position, Velocity, and Acceleration		X
5.1.3 - The Virtual Work		X

Equation		
5.2 Beam Deflection Analysis	X	
5.3 Buckling Analysis	X	
5.4 Shear Torsion Analysis	X	
6.0 - Testing and Construction	X	X
6.1 Base Construction		X
6.2 Rapid Prototyping		X
6.3 Crank Slider Construction	X	
6.4 Programming and Electronics	X	
6.5 Mechanism Performance	X	X
6.5.1 Crank Mechanism		X
6.5.2 Dispenser Mechanism	X	
6.5.3 Electronics Performance		X
6.6 Prototype Refinement	X	X
7.0 - Results and Recommendations	X	X
7.1 - Results	X	X
7.2 - Recommendations	X	X
7.2.1 - Machine Rather than 3D Print	X	
7.2.2 - Electrical Hardware	X	
7.2.3 - Slider Stability		X
7.2.4 - Create a Custom Dispenser	X	
7.2.5 - Assembly of Angle Support		X
7.2.6 - Improve Aesthetics		X
8.0 - Conclusion	X	X

Appendix B: CAD Drawings

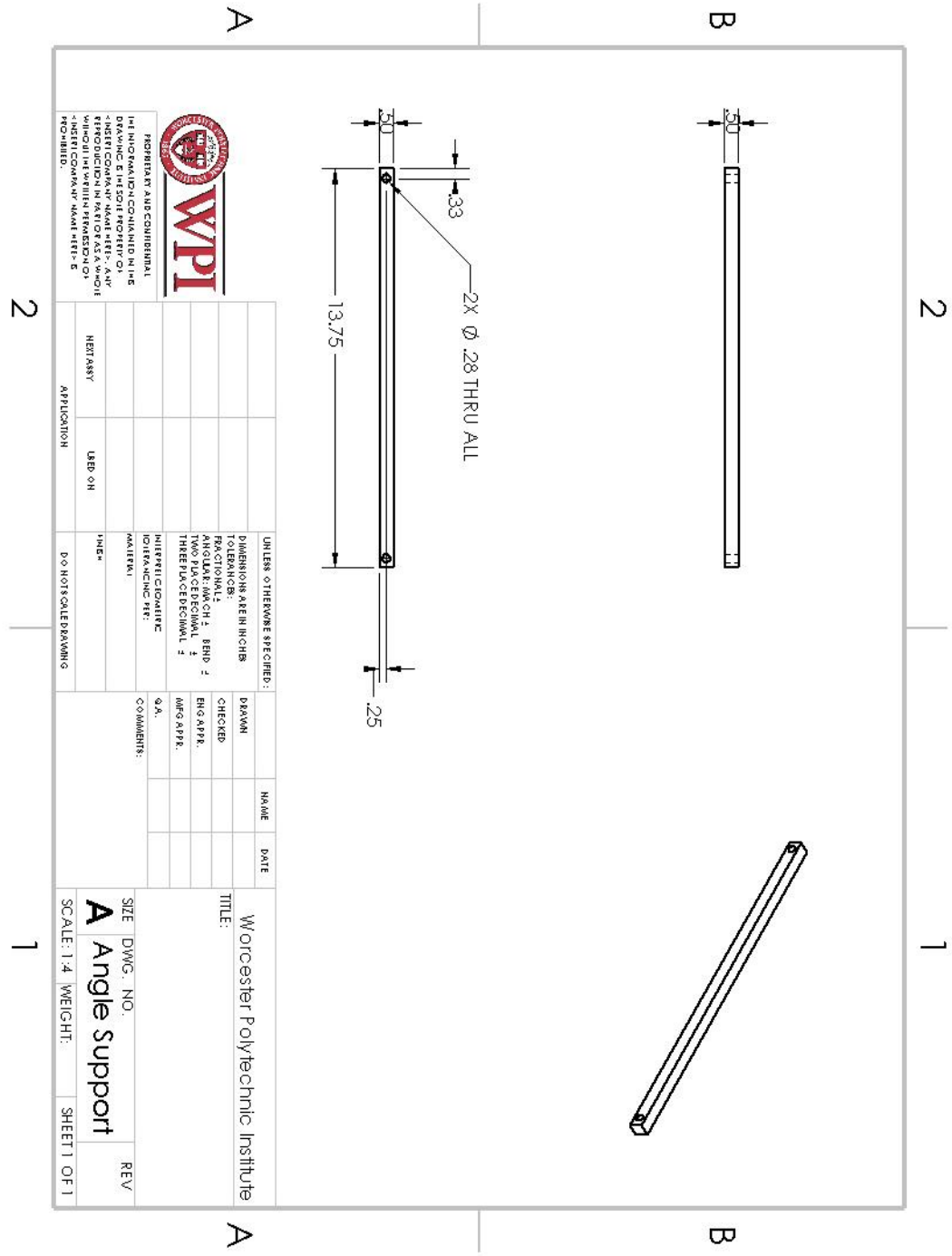

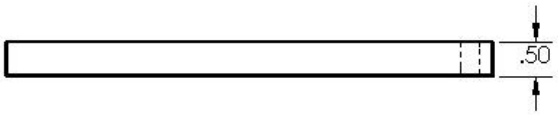

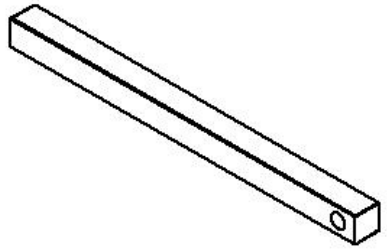

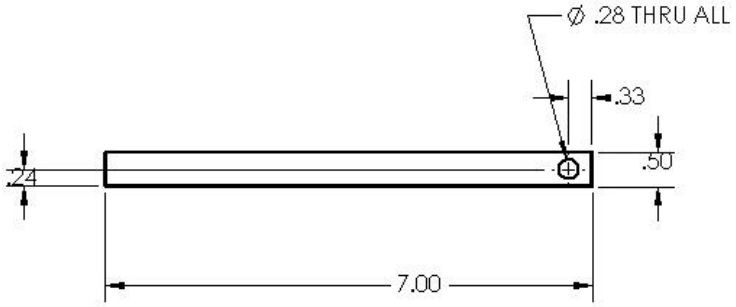

PROPRIETARY AND CONFIDENTIAL
THE INFORMATION CONTAINED IN THIS DRAWING IS THE SOLE PROPERTY OF <INSERT COMPANY NAME HERE>. ANY REPRODUCTION IN PART OR AS A WHOLE WITHOUT THE WRITTEN PERMISSION OF <INSERT COMPANY NAME HERE> IS PROHIBITED.

NEXT ASSY	USED ON	
APPLICATION		

UNLESS OTHERWISE SPECIFIED:
DIMENSIONS ARE IN INCHES
TOLERANCES:
FRACTIONAL ±
ANGULAR: MACH ± BEND ±
TWO PLACE DECIMAL ±
THREE PLACE DECIMAL ±
INTERPRET GEOMETRIC TOLERANCING PER:
MATERIAL
FINISH
DO NOT SCALE DRAWING

	NAME	DATE
DRAWN		
CHECKED		
ENG APPR.		
MFG APPR.		
Q.A.		
COMMENTS:		

Worcester Polytechnic Institute

TITLE:

SIZE	DWG. NO.	REV
A	Basic Crank	
SCALE: 1:2	WEIGHT:	SHEET 1 OF 1

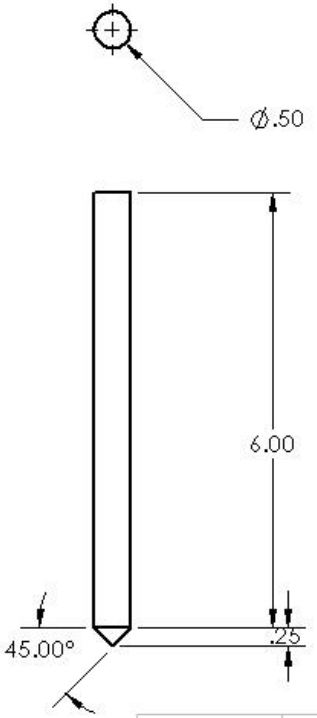

		UNLESS OTHERWISE SPECIFIED:		NAME	DATE
		DIMENSIONS ARE IN INCHES TOLERANCES: FRACTIONAL ± ANGULAR: MACH ± BEND ± TWO PLACE DECIMAL ± THREE PLACE DECIMAL ±	DRAWN		
			CHECKED		
			ENG APPR.		
			MFG APPR.		
		INTERPRET GEOMETRIC TOLERANCING PER:	Q.A.		
		MATERIAL	COMMENTS:		
NEXT ASSY	USED ON	FINISH			
APPLICATION		DO NOT SCALE DRAWING			

WPI

PROPRIETARY AND CONFIDENTIAL

THE INFORMATION CONTAINED IN THE DRAWING IS THE SOLE PROPERTY OF <INSERT COMPANY NAME HERE>. ANY REPRODUCTION IN PART OR AS A WHOLE WITHOUT THE WRITTEN PERMISSION OF <INSERT COMPANY NAME HERE> IS PROHIBITED.

Worcester Polytechnic Institute

TITLE:

SIZE	DWG. NO.	REV
A	Basic Plug	
SCALE: 1:2	WEIGHT:	SHEET 1 OF 1

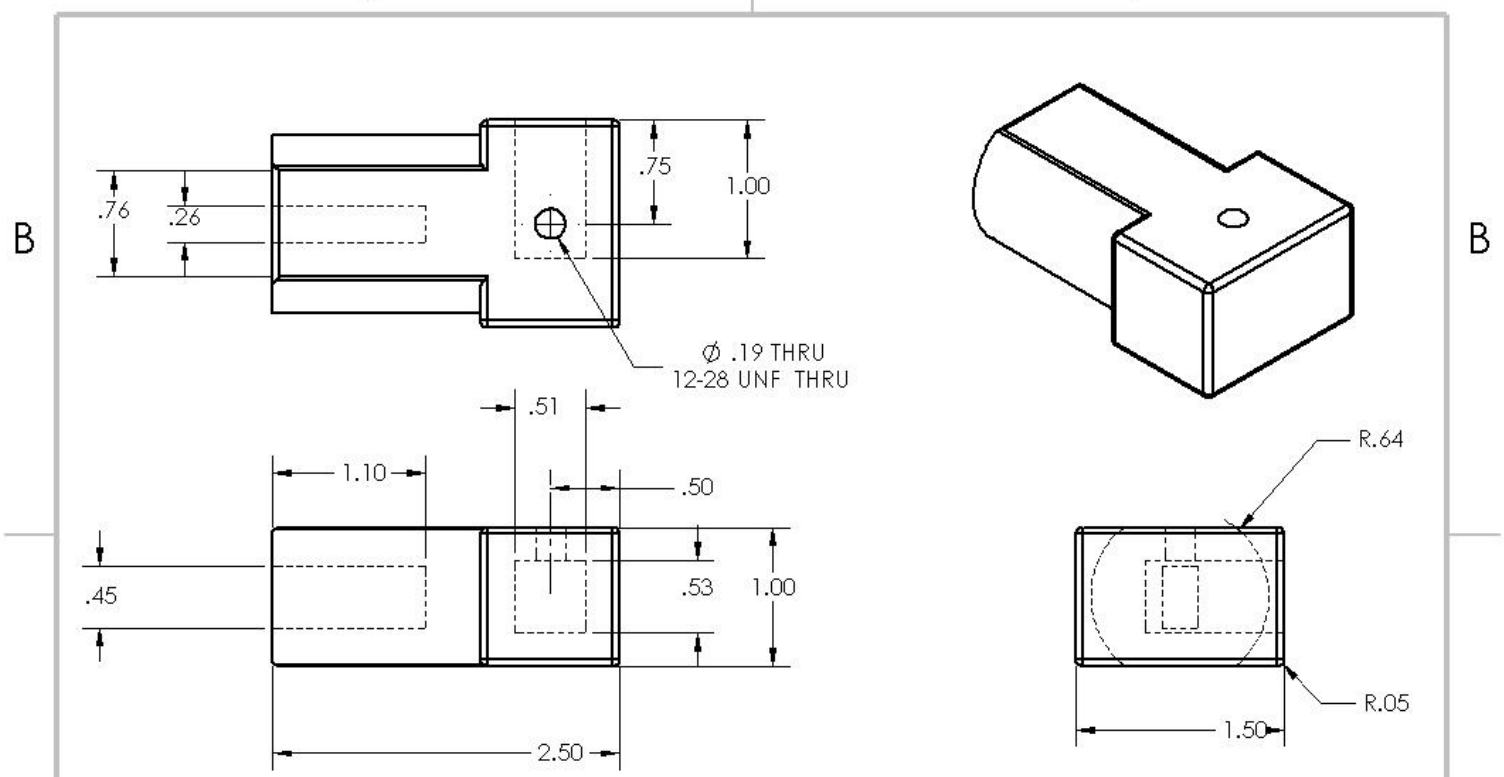

PROPRIETARY AND CONFIDENTIAL
THE INFORMATION CONTAINED IN THIS DRAWING IS THE SOLE PROPERTY OF <INSERT COMPANY NAME HERE>. ANY REPRODUCTION IN PART OR AS A WHOLE WITHOUT THE WRITTEN PERMISSION OF <INSERT COMPANY NAME HERE> IS PROHIBITED.

UNLESS OTHERWISE SPECIFIED:	NAME	DATE
DIMENSIONS ARE IN INCHES TOLERANCES: FRACTIONAL ± ANGULAR: MACH ± BEND ± TWO PLACE DECIMAL ± THREE PLACE DECIMAL ±	DRAWN	
	CHECKED	
	ENG APPR.	
	MFG APPR.	
INTERPRET GEOMETRIC TOLERANCING PER:	Q.A.	
MATERIAL	COMMENTS:	
FINISH		
NEXT ASSY / USED ON		
APPLICATION	DO NOT SCALE DRAWING	

Worcester Polytechnic Institute

TITLE:

SIZE	DWG. NO.	REV
A	Printed Coupler	
SCALE: 1:1	WEIGHT:	SHEET 1 OF 1

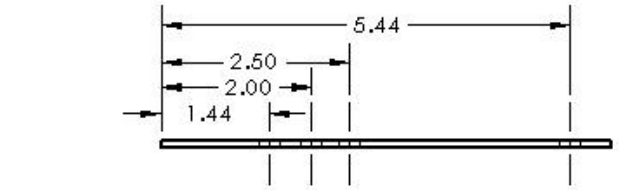

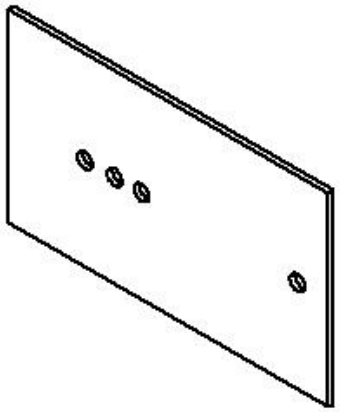

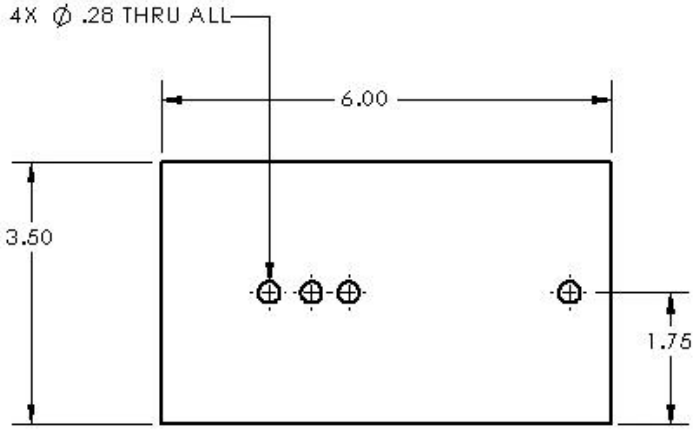

		UNLESS OTHERWISE SPECIFIED:		NAME	DATE	Worcester Polytechnic Institute
		DIMENSIONS ARE IN INCHES TOLERANCES: FRACTIONAL ± ANGULAR: MACH ± BEND ± TWO PLACE DECIMAL ± THREE PLACE DECIMAL ±	DRAWN			TITLE:
			CHECKED			
			ENG APPR.			
			MFG APPR.			
			Q.A.			
		NEXT PRECISE GEOMETRIC TOLERANCING PER:	COMMENTS:			
		MATERIAL				SIZE A — DWG. NO. Slider Plate — REV
NEXT ASSY	USED ON	FINISH				
APPLICATION		DO NOT SCALE DRAWING				SCALE: 1:2 — WEIGHT: — SHEET 1 OF 1

PROPRIETARY AND CONFIDENTIAL

THE INFORMATION CONTAINED IN THIS DRAWING IS THE SOLE PROPERTY OF <INSERT COMPANY NAME HERE>. ANY REPRODUCTION IN PART OR AS A WHOLE WITHOUT THE WRITTEN PERMISSION OF <INSERT COMPANY NAME HERE> IS PROHIBITED.

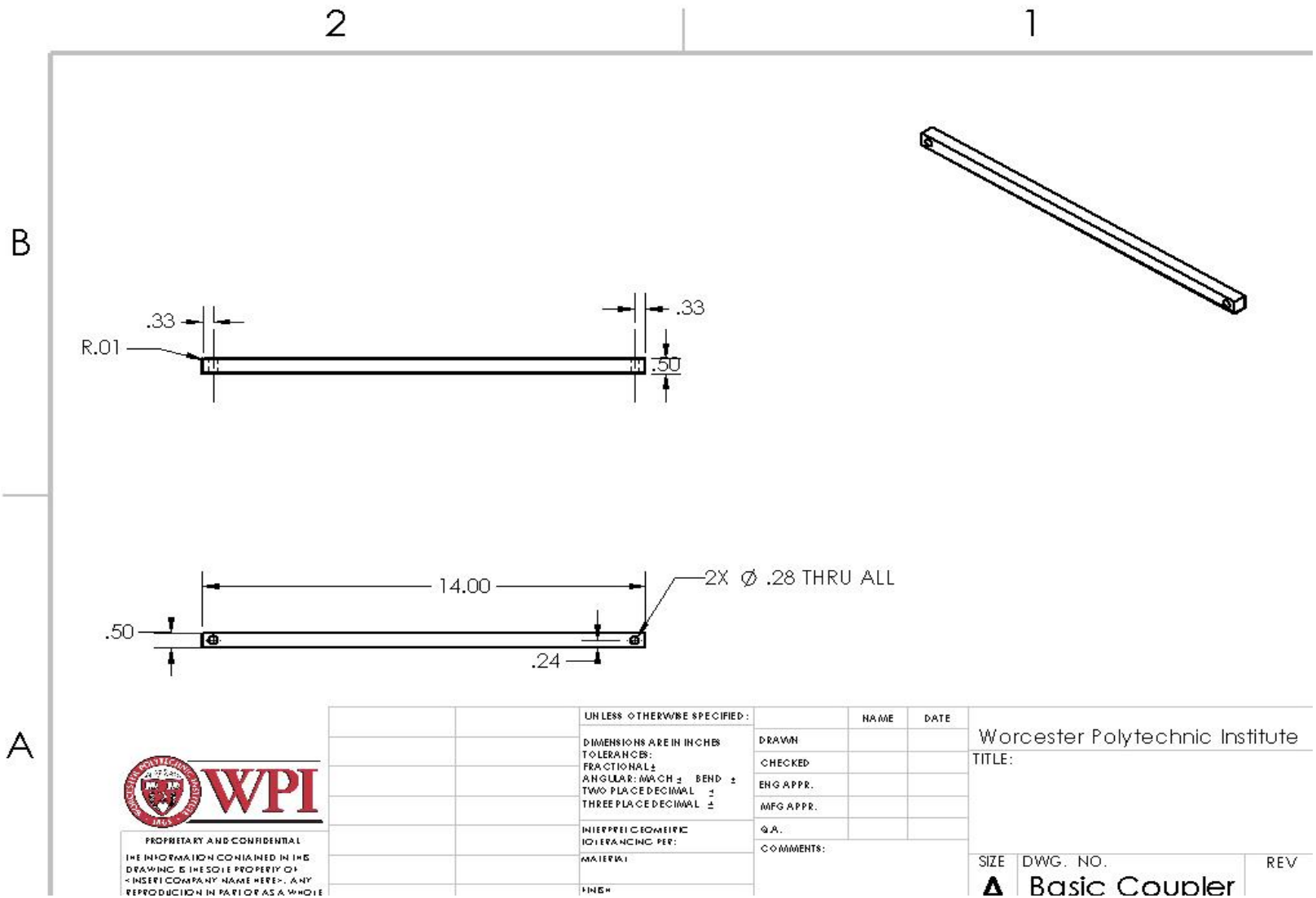
2
1
B
A
.33
.33
R.01
.50
14.00
2X Ø .28 THRU ALL
.50
.24
UNLESS OTHERWISE SPECIFIED:
DIMENSIONS ARE IN INCHES
TOLERANCES:
FRACTIONAL ±
ANGULAR: MACH ± BEND ±
TWO PLACE DECIMAL ±
THREE PLACE DECIMAL ±
INTERPRET GEOMETRIC TOLERANCING PER:
MATERIAL
FINISH
NAME
DATE
DRAWN
CHECKED
ENG APPR.
MFG APPR.
Q.A.
COMMENTS:
Worcester Polytechnic Institute
TITLE:
SIZE
DWG. NO.
REV
A
Basic Coupler
WPI
PROPRIETARY AND CONFIDENTIAL
THE INFORMATION CONTAINED IN THIS DRAWING IS THE SOLE PROPERTY OF <INSERT COMPANY NAME HERE>. ANY REPRODUCTION IN PART OR AS A WHOLE

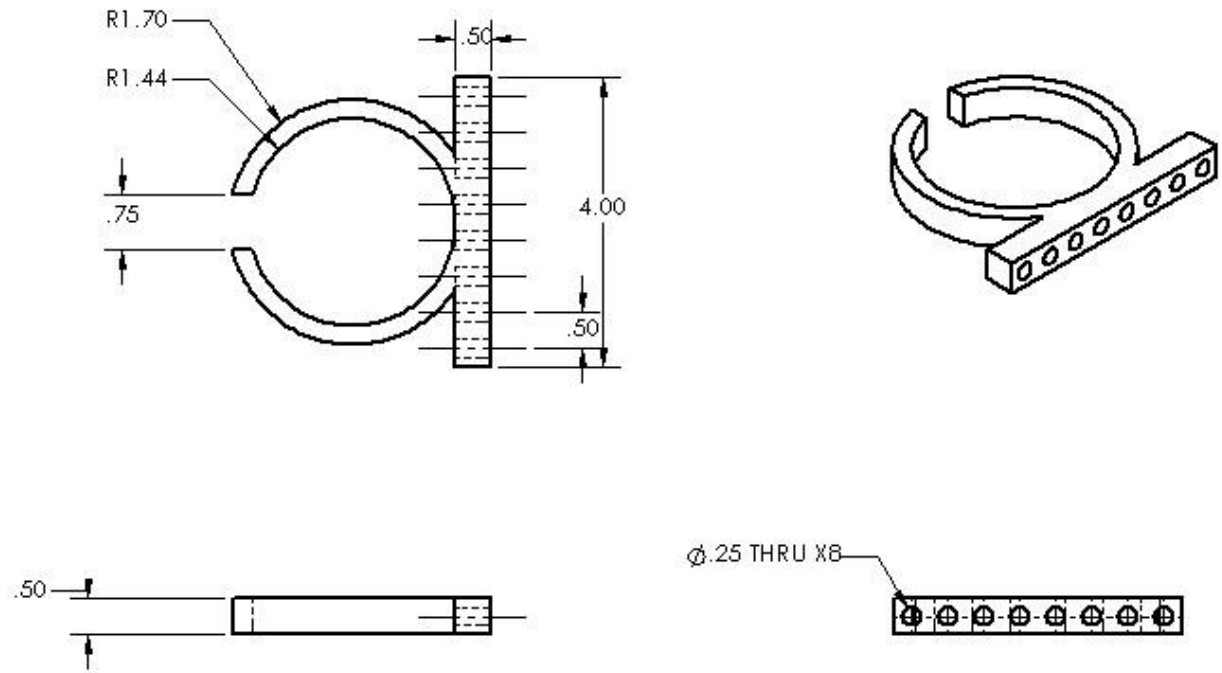

UNLESS OTHERWISE SPECIFIED:

DIMENSIONS ARE IN INCHES
TOLERANCES:
FRACTIONAL ±
ANGULAR: MACH ± BEND ±
TWO PLACE DECIMAL ±
THREE PLACE DECIMAL ±

INTERPRET GEOMETRIC TOLERANCING PER:

MATERIAL

FINISH

DO NOT SCALE DRAWING

	NAME	DATE
DRAWN		
CHECKED		
ENG APPR		
MFG APPR		
Q.A.		

COMMENTS:

NEXT ASSY | USED ON

APPLICATION

Worcester Polytechnic Institute

TITLE:

SIZE A | DWG. NO. Printed Holder | REV

SCALE: 1:2 | WEIGHT: | SHEET 1 OF 1

PROPRIETARY AND CONFIDENTIAL
THE INFORMATION CONTAINED IN THIS DRAWING IS THE SOLE PROPERTY OF <INSERT COMPANY NAME HERE>. ANY REPRODUCTION IN PART OR AS A WHOLE WITHOUT THE WRITTEN PERMISSION OF <INSERT COMPANY NAME HERE> IS PROHIBITED.

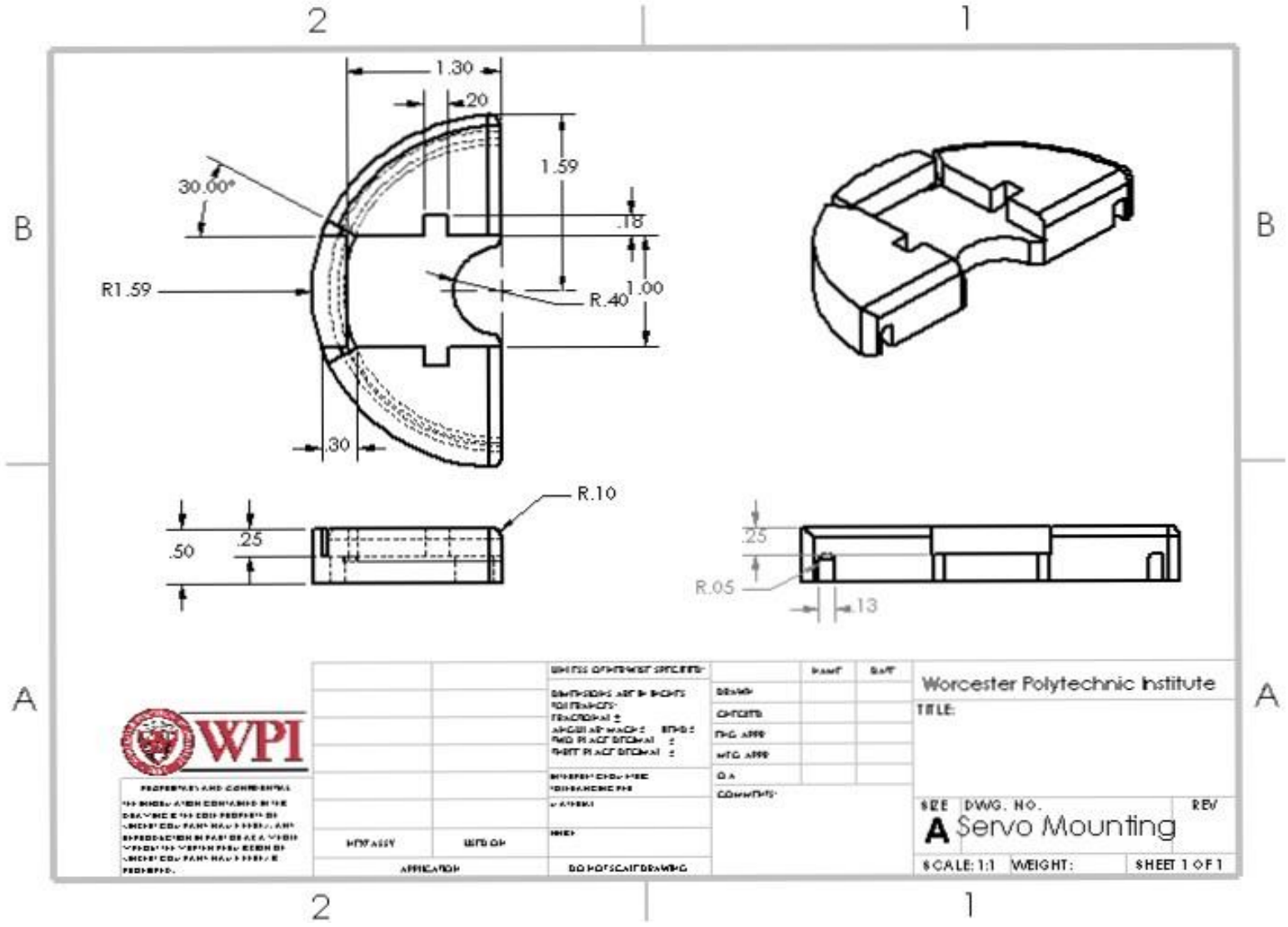
2
1
B
A
1.30
.20
1.59
30.00°
.18
R1.59
R.40
1.00
.30
R.10
.50
.25
.25
R.05
.13
WPI
Worcester Polytechnic Institute
TITLE:
SIZE
DWG. NO.
REV
A
Servo Mounting
SCALE: 1:1
WEIGHT:
SHEET 1 OF 1

ITEM NO.	PART NUMBER	DESCRIPTION	QTY.
1	_2380_b_2	Base	1
2	60585K111	8020 Bars	2
3	14058	Connecting Bracket	2
4	PN0049	Motor	1
5	Mounting Face Plate	Motor Face Plate	1
6	Angle Support		1
7	HX-SHCS 0.25-28x0.25x0.25-N	1/4 in Screws	2
8	HX-SHCS 0.25-28x0.625x0.625-N	1/4 in Screws	2
9	PrintedCoupler		1
10	Basic Crank		1
11	HX-SHCS 0.19-32x0.25x0.25-N	1/4 in Screws	1
12	Basic Coupler		1
13	Basic Axle		2
14	Basic Shaft Collar		4
15	9904K1	Slider	1
16	Slider Plate		1
17	CR-FHM1 0.25-28x1x1-N	1/4 in Machine Screws	3
18	PrintedHolder		1
19	Hopper	Dispenser	1
20	PrintedServoMounting		1
21	PrintedPlug		1
22	B01N2S59S9	Servo	1

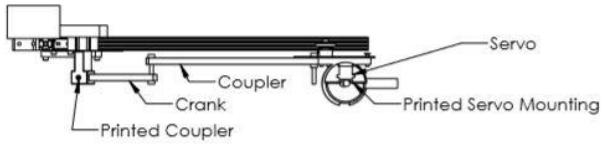

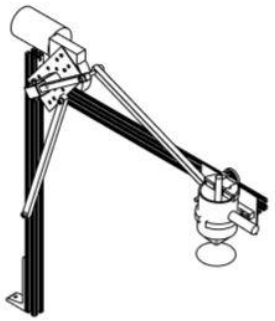

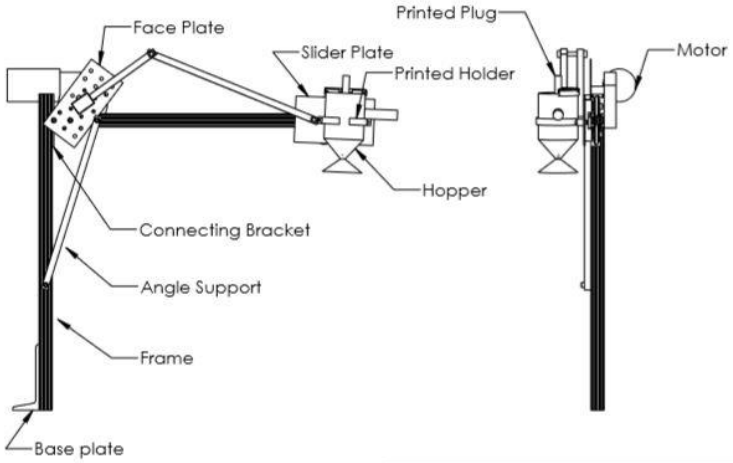

PROPRIETARY AND CONFIDENTIAL

THE INFORMATION CONTAINED IN THIS DRAWING IS THE SOLE PROPERTY OF <INSERT COMPANY NAME HERE>. ANY REPRODUCTION IN PART OR AS A WHOLE WITHOUT THE WRITTEN PERMISSION OF <INSERT COMPANY NAME HERE> IS PROHIBITED.

NEXT ASSY | USED ON

APPLICATION

UNLESS OTHERWISE SPECIFIED:
DIMENSIONS ARE IN INCHES
TOLERANCES:
FRACTIONAL ±
ANGULAR: MACH ± BEND ±
TWO PLACE DECIMAL ±
THREE PLACE DECIMAL ±

INTERPRET GEOMETRIC TOLERANCING PER:
MATERIAL
FINISH
DO NOT SCALE DRAWING

	NAME	DATE
DRAWN		
CHECKED		
ENG APPR.		
MFG APPR.		
Q.A.		

COMMENTS:

Worcester Polytechnic Institute

TITLE:

SIZE B | DWG. NO. Final Assembly | REV

SCALE: 1:8 | WEIGHT: | SHEET 2 OF 2

Appendix C: Calculations

The following Calculations aided us in our design process to plan for potential mechanical failures and ensure that we selected a motor that could operate our device.

Automated salt shaker MQP

Velocity analysis:

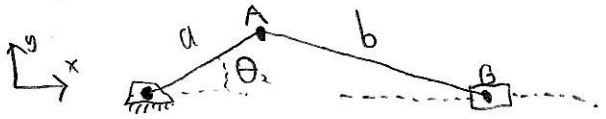

Assumptions and givens:

$\theta_2 = 30°$
$a = 7$ in. — Length of crank
$b = 14$ in. — Length of rocker
$c = 0$ in. — Offset of the slider

Calculations; θ_{31} for open, θ_{32} for crossed

$\theta_3 = a\sin\left((a \cdot \sin(\theta_2) - c)/b\right)$
$\theta_{32} = a\sin\left((7\sin(30) - 0)/14\right)$
$\theta_{32} = 14.478°$
$\theta_{31} = 165.522°$

$d = a\cos(\theta_2) - b\cos(\theta_3)$ — Length of "base link"
$d_2 = 7\cos(30) - 14\cos(14.478)$
$d_2 = -7.49$ in.
$d_1 = 19.616$ in.

Assume $\omega_2 = 30$ rpm $= \pi$ rad/s

$\omega_3 = a/b \cdot \cos(\theta_2)/\cos(\theta_3) \cdot \omega_2$ — Rotation of the coupler
$\omega_{31} = 7/14 \cdot \cos(30)/\cos(14.478) \cdot \pi$
$\omega_{31} = 1.405$ rad/s
$\omega_{32} = -1.405$ rad/s

$V_A = a\ \omega_2 (-\sin(\theta_2) + j\cos(\theta_2))$ Velocity of point A

$V_A = 7 \cdot \pi \cdot (-\sin(30) + j\cos(30))$

$V_A = (-11 + 19.05j)$ in/s

$V_B = -a \cdot \omega_2 \sin(\theta_2) + b \cdot \omega_3 \cdot \sin(\theta_3)$ Velocity of point B

$V_{B1} = -7 \cdot \pi \cdot \sin(30) + 14 \cdot 1.405 \cdot \sin(14.478)$

$V_{B1} = -6.08$ in/s

$V_{B2} = -15.91$ in/s

Automated Salt Shaker MAP

Acceleration Analysis

Assumptions and Givens:

$\alpha_2 = 0$

$\theta_1 = 0°$

$\theta_4 = 90°$

Calculations:

$$\alpha_3 = \frac{a\alpha_2 \cos\theta_2 - a\omega_2^2 \sin\theta_2 + b\omega_3^2 \sin\theta_3}{b\cos\theta_3}$$

$$\alpha_{31} = \frac{0 - (7in)(1rad/s)^2 \sin(30°) + (14in)(1.405rad/s^2)\sin(165.522°)}{(14in)\cdot\cos(165.522°)}$$

$\alpha_{31} = -34.034\ rad/s^2$

$\alpha_{32} = -35.05\ rad/s^2$

$$\ddot{d} = -a\alpha_2 \sin\theta_2 - a\omega_2^2 \cos\theta_2 + b\alpha_3 \sin\theta_3 + b\omega_3^2 \cos\theta_3$$

$$\ddot{d}_1 = 0 - (7in)(1rad/s)^2 \cdot \cos(30°) + 14in(-34.034\ rad/s)\sin(165.522°) + 14in(1.405\ rad/s)^2 \sin(165.522°)$$

$\ddot{d}_1 = -172.05\ in/s^2$

$\ddot{d}_2 = -175.6\ in/s^2$

Velocities of Centers of Gravity

Velocity of slider

Given: $V_{G\,slider} = V_B$

$V_{G\,slider_1} = -6.08$ in/s

$V_{G\,slider_2} = -15.91$ in/s

Link 2

$$V_{G2} = G_2 W_2 \left[-\sin(\theta_2 + \delta_2) + \cos(\theta_2 + \delta_2) j\right]$$

$$V_{G2} = 3.5\pi \text{ in} \cdot \text{rad/s} \left[-\sin(30) + \cos(30)\right]$$

$$V_{G2} = (-5.498 + 9.522j) \text{ in/s}$$

Link 3

$$V_{G3} = V_A + V_{G3A}$$

$$V_{G3A} = G_3 W_3 \left[-\sin(\theta_3 + \delta_3) + j\cos(\theta_3 + \delta_3)\right]$$

$$V_{G31A} = 7 \text{ in} \cdot 1.405 \left[-\sin(165.52) + j\cos(165.52)\right]$$

$$V_{G31A} = -2.459 + (-9.523)j$$

$$V_{G32A} = 2.459 + (-9.523)j$$

$$V_{G31} = (-11 + 1.905j) + (-2.459 - 9.523j)$$

$$V_{G31} = (13.459 + 9.527j) \text{ in/s}$$

$$V_{G32} = (-8.541 + 9.527j) \text{ in/s}$$

Centers of mass:
Crank: 3.5 in
Coupler: 7 in

$$R_S = s[\cos(\theta_2+\delta_2) + j\sin(\theta_2+\delta_2)]$$
$$V_C = s\omega_2[-\sin(\theta_2+\delta_2) + j\cos(\theta_2+\delta_2)]$$
$$A_S = s\alpha_2[-\sin(\theta_2+\delta_2)+j\cos(\theta_2+\delta_2)] - s\omega_2^2[\cos(\theta_2+\delta_2)+j\sin(\theta_2+\delta_2)]$$

$s = 3.5$ in
$\delta_2 = 0$ $\alpha = 0$ Desired specs
$\omega_2 = 30$ rpm $= \pi$ rad/s

$A_{G_2} = 29.916 + 17.272j$
$A_{G_{slider}} = -172.05$ in/s^2 open
-175.60 in/s^2 closed

$A_{G3} = A_A + A_{GA3}$

$A_{IA} = -b\alpha_3(\sin\theta_3 + j\cos\theta_3) + b\omega_3^2(\cos\theta_3 + j\sin\theta_3)$
$A_{A_1} = -145.882 - 454.50j$
$A_{A_2} = -95.92 + 482.027j$

$$A_{G_3A} = G_3 \alpha_3 [-\sin(\theta_3 + \delta_3) + j\cos(\theta_3 + \delta_3)] - G_3 \omega_3^2 [\cos(\theta_3 + \delta_3) + j \sin(\theta_3 + \delta_3)]$$

$$A_{G_3A_1} = 72.941 + 227.218j$$

$$A_{G_3A_2} = 47.96 - 241.01j$$

$$A_{G_3} = A_A + A_{fA}$$

$$A_{G_31} = (-145.882 - 454.5j) + (72.941 + 227.218j)$$

$$A_{G_31} = -72.941 - 227.282j$$

$$A_{G_32} = -47.96 + 241.017j$$

Automated Salt Shaker MQP

The Virtual Work Equation

Assumptions and Givens:
Assume no external forces act on the system.
Assume the only Torque on the system is supplied by the motor
Assume the crank is not accelerating.
Assume the slider does not rotate.
$m_2 = 1.01$ lbf , $m_3 = 2.02$ lbf , $m_4 = 5$ lbf
$I_{G3} = 66.51$ psi
Calculations:

$$T_{12} = \frac{m_2(a_{G2x}V_{G2x} + a_{G2y}V_{G2y}) + m_3(a_{G3x}V_{G3x} + a_{G3y}V_{G3y}) + m_4(a_{G4x}V_{G4y}) + I_{G3}\alpha_3\omega_3}{\omega_2}$$

$$T_{12} = \frac{1.01\text{lbf}(29.916\,\text{in/s}^2 * -5.498\,\text{in/s} + 17.272\,\text{in/s}^2 * 9.522\,\text{in/s}) + 2.02\text{lbf}(-72.941\,\text{in/s}^2 * -13.459\,\text{in/s} + -227.282\,\text{in/s}^2 * 9.527\,\text{in/s}) + 5\text{lbf}(-172.05\,\text{in/s}^2 * -15.91\,\text{in/s}) + 66.51\,\text{psi} * 1.405\,\text{rad/s} * -34.034\,\text{rad/s}}{\pi\ \text{rad/s}}$$

$T_{12_1} = 34.68$ in-lb

$T_{12_2} = 224.5$ in-lb

Automated Salt Shaker Map

Beam Deflection Analysis:

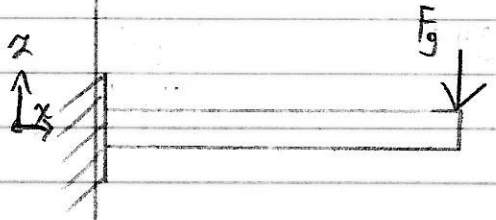

Assumptions and Givens:

Assume $F_g = 25 lbf$,

$L_1 = 7 in$

$L_2 = 14 in$

Assume the linkages act as cantilevers when jammed

$E = 10,000,000 psi$

$I_1 = 0.005208 in^4$

$I_2 = I_1$

Calculations: δ_1 = crank deflection, δ_2 = coupler deflection

$$\delta = \frac{F * L^3}{3 * E * I}$$

$$\delta_1 = \frac{25 lbf * (7 in)^3}{3 * (10^6 psi) * (0.005208 in^4)}$$

$\delta_1 = 0.057 in$

$\delta_2 = 0.457 in$

The linkages will not significantly deflect

Automated Salt Shaker MQP

Buckling Analysis

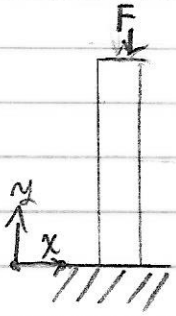

Assumptions and Givens:

Approximate the linkage as fixed at both ends when jammed

$n = 4$

$E = 10^6 psi$

$I = 0.005208 in^4$

$L_1 = 7 in$

$L_2 = 14 in$

$A = 0.25$

Calculations:

Method A:

$$F_A = \frac{n * \pi^2 * E * I}{L^2}$$

$$F_{1A} = \frac{4 * \pi^2 * 10^6 psi * 0.005208 in^4}{7^2 in}$$

$F_1A = 4028.4 lbf$

$F_2A = 1007.1 lbf$

Method B:

$$F_B = \frac{\pi^2 * E * A}{4 * S_r^2}$$

$$S_r = \frac{L}{k}$$

$$k = \sqrt{\frac{I}{A}}$$

$$k = \sqrt{\frac{0.005208\,in^4}{0.25\,in^2}}$$

$$k = 0.1443\,in$$

$$Sr_1 = \frac{7\,in}{0.1443\,in}$$

$$Sr_1 = 48.51$$
$$Sr_2 = 97.02$$

$$F_{1B} = \frac{\pi^2 * 10^6\,psi * 0.25\,in^2}{4 * 48.51}$$

$$F_{1B} = 2622\,lbf$$
$$F_{2B} = 655.6\,lbf$$

Axial Compression will not occur.

Automated Salt Shaker MQP

Torque Analysis on Printed Coupler

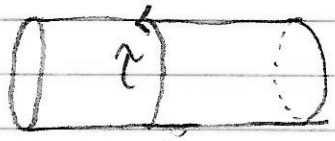

Assumptions and Givens:

Assume the coupler is a cylinder

Torque = 102 in-lb

$d = 0.4$ in

$D = 1.28$ in

$G = 43,511$ psi

Calculations:

$$\tau = \frac{\text{Torque}}{(\pi/16)(D^4 - d^4)/D}$$

$$\tau = \frac{102 \text{ in-lb}}{(\pi/16)(1.28^4_{in} - 0.4^4_{in})/1.28 \text{ in}}$$

$\tau = 250$ psi

$\tau = 375$ psi with 50% safety factor

$375 \text{ psi} \ll G = 43,511$ psi

Torsion in shear will not occur